Authentage

2023

CATALOGUE

Authentage Catalogus 2024 Authentage Katalogus 2024
Authentage Catalogue 2024 Authentage Katalog 2024
Authentage Verlichting Authentage Lighting
Authentage éclairage Authentage Beleuchtung

BCOSY TIP: ZOEK eenvoudig in de PDF op artikelnummer of naam via CNTRL+F (find)

www.Bcosy.be - Waarschoot - België - Belgique - Belgium - Belgien tel 0032 (0) 9 378 24 30 Mail: info@bcosy.be

Index

PRODUCT INDEX 4

MATERIAL & FINISH 6

PRODUCT CATALOGUE 8

- INDOOR 10

- OUTDOOR 348

- ACCESSORIES 468

PICTOGRAMS 496

CONTACT 498



AUTHENTAGE I INDEX

Authentage Catalogus 2024 Authentage Katalogus 2024 Authentage Catalogue 2024 Authentage Katalog 2024 Authentage Verlichting Authentage Lighting Authentage éclairage Authentage Beleuchtung
Authentage Webshop Authentage Verlichting Authentage Armaturen Authentage Winkels Authentage Verkooppunten Authentage Verdelers Authentage Verdeelpunten Authentage België Authentage Nederland Authentage Vente en Ligne Authentage Boutique Vente en Ligne Authentage Luminaires Authentage éclairage
Authentage Revendeurs Authentage Points de vente Authentage Magasins Authentage Boutiques Authentage Points de distribution Authentage France Authentage Lighting Authentage Retailers Authentage Dealers Authentage Distributors Authentage Points of sale Authentage Resellers Authentage England
Authentage Beleuchtung Authent Beleuchtung Authentage Leuchten Authentage Händler Authentage Shops Authentage Verkaufsstellen Authentage Vertriebspartner Authentage Deutschland Authentage E-shop Authentage Geschäfte Authentage Vertriebsstellen

www.Bcosy.be - Waarschoot - België - Belgique - Belgium - Belgien tel 0032 (0) 9 378 24 30 Mail: info@bcosy.be

Product index

INDOOR BINNENVERLICHTING

SUSPENSION Hanglampen

BELLEFEU® 12
VITRINE 24
VITRINE PETITE 32
ECLIPS 34
Q-BRI 36
ALB 40
ELIGNE 42
ELEBASE 43
ELEGANCE 49
TUBELUM 52
TISSELUM 57
FILOU 58
MOEMOE 60

CEILING Plafondlampen

VITRINE 66
VITRINE PETITE 72
Q-BRI 75
FILOU 77
BAINWAT 78
BARRON 79
ECLIPS 84
TUBELUM 86

SPOT Opbouwspots

CENTONZE 90
COUPETTE 103
LIT 105
MARRON 110
COMETE 124
POIRE 138
FLEURE 154
FLEURE TWIN 167
FISTON 178
TUBELUM 193

TRACK Spots op baren

TRACK 200

RECESSED Inbouwspots

PHANTOME 208
Q-BRI 212
AUREOLE 214

WALL Wandlampen

BELLEFEU® 224
VITRINE PETITE 232
VITRINE 233
ALB 238
BALUME 240
Q-BRI 242
MATISSE 245
MICRO 246
MACRO 252
TISSELUM 256
TUBELUM 257
FILOU 258
BOMPA 260
BAINWAT 262
ECLIPS 264
BEAUTIQUE 265
PHANTOME 266
LIT 267
LISIBLE 269
FISTON CAPUCHE 272
SEVERE 274
GALED 278
GRILLE 281

PICTURE LIGHT Schilderijverlichting

MATISSE 286
RUBENS 296

TABLE Tafellampen

BELLEFEU® 300
BELLEFEU® ON BATTERY 303
VITRINE 308
MICRO 310
COMETE 311
Q-BRI 314
RUBENS 315
TUBELUM 316
SEVERE 317

FLOOR Vloerlampen

BELLEFEU® 320
MICRO 328
MATISSE 329
MACRO 330
TUBELUM 331
ELIGNE 333
LISIBLE 334
LIT 337

CREATE YOUR OWN

BELLEFEU® 340
BELLEFEU® FIREPLACE 344

OUTDOOR BUITENVERLICHTING

CREATE YOUR OWN

BELLEFEU® SUBTILE 350

WALL Muurlampen Buiten

BELLEFEU® 354
BALUME 355
MICRO 356
VITRINE 365
VITRINE PETITE 371
NOBLESSE 374
GRACIEUZE 376
Q-BRI 381
ELEGANCE 385
ELEBASE 386
MACRO 388
ELIGNE 392
GRILLE 393
BEAUTIQUE 396

SPIKE Tuinlampen op pin

MICRO 400
MACRO 401
CHARMOND 402
MACRO POWER PROJECTOR 404

GROUND & POLE Paalverlichting

BALUME 408
PIPILIER 409
NOBLESSE 410
CHARMOND 414
GALED 420
VITRINE 426
GRACIEUZE 428
BEAUTIQUE 436
ALB 437

RECESSED Inbouw Grond

SUBTILE 440

FLOOR & TABLE Vloer en tafellampen buiten

BELLEFEU® 446
BELLEFEU® ON BATTERY 449
VITRINE 450
MICRO 452
MACRO 453
GRACIEUZE 455

SUSPENSION Hanglampen buiten

BELLEFEU® 460
GRACIEUZE 462
ELEBASE 465
ELEGANCE 467

ACCESSORIES

CANDLE WAX / GLASS / ALB 470
KELVIN KILLER® 474
DECORATIVE GLASS 475
SHADE 478
PEDESTAL 480
CONNECTION SYSTEM 481
BUILT-IN ACCESSORIES 483
DRIVER / TRANSFORMER 486
LED STRIP 488
CABLE 489
CHAIN 490
SENSOR 491
SWITCH 492
DIMMER 493
CONNECTIVITY 494
MAINTENANCE KIT 495

AUTHENTAGE I PRODUCT INDEX

Authentage Catalogus 2024 Authentage Katalogus 2024 Authentage Catalogue 2024 Authentage Katalog 2024 Authentage Verlichting Authentage Lighting Authentage éclairage Authentage Beleuchtung
Authentage Webshop Authentage Verlichting Authentage Armaturen Authentage Winkels Authentage Verkooppunten Authentage Verdelers Authentage Verdeelpunten Authentage België Authentage Nederland Authentage Vente en Ligne Authentage Boutique Vente en Ligne Authentage Luminaires Authentage éclairage
Authentage Revendeurs Authentage Points de vente Authentage Magasins Authentage Boutiques Authentage Points de distribution Authentage France Authentage Lighting Authentage Retailers Authentage Dealers Authentage Distributors Authentage Points of sale Authentage Resellers Authentage England
Authentage Beleuchtung Authent Beleuchtung Authentage Leuchten Authentage Händler Authentage Shops Authentage Verkaufsstellen Authentage Vertriebspartner Authentage Deutschland Authentage E-shop Authentage Geschäfte Authentage Vertriebsstellen

www.Bcosy.be - Waarschoot - België - Belgique - Belgium - Belgien tel 0032 (0) 9 378 24 30 Mail: info@bcosy.be

BELLEFEU®	12
VITRINE	24
VITRINE PETITE	32
ECLIPS	34
Q-BRI	36
ALB	40
ELIGNE	42
ELEBASE	43
ELEGANCE	49
TUBELUM	52
TISSELUM	57
FILOU	58
MOEMOE	60

Suspension

—

INDOOR

—



Authentage Catalogus 2024 Authentage Katalogus 2024 Authentage Catalogue 2024 Authentage Katalog 2024 Authentage Verlichting Authentage Lighting Authentage éclairage Authentage Beleuchtung
Authentage Webshop Authentage Verlichting Authentage Armaturen Authentage Winkels Authentage Verkooppunten Authentage Verdelers Authentage Verdeelpunten Authentage België Authentage Nederland Authentage Vente en Ligne Authentage Boutique Vente en Ligne Authentage Luminaires Authentage éclairage
Authentage Revendeurs Authentage Points de vente Authentage Magasins Authentage Boutiques Authentage Points de distribution Authentage France Authentage Lighting Authentage Retailers Authentage Dealers Authentage Distributors Authentage Points of sale Authentage Resellers Authentage England
Authentage Beleuchtung Authent Beleuchtung Authentage Leuchten Authentage Händler Authentage Shops Authentage Verkaufsstellen Authentage Vertriebspartner Authentage Deutschland Authentage E-shop Authentage Geschäfte Authentage Vertriebsstellen

www.Bcosy.be - Waarschoot - België - Belgique - Belgium - Belgien tel 0032 (0) 9 378 24 30 Mail: info@bcosy.be

Pictograms

CE Standard
CE Norm
Norme CE
CE Norm

Suitable to be mounted on normally flammable wooden surfaces
Monteerbaar op brandbare oppervlakte
À utiliser en surface normalement inflammables en bois
Montierbar auf normal brennbaren Holzoberflächen

IP 43

Ingress Protection
Beschermingsgraad
Indice de protection
Eindringschutz

DI

Driver / Trafo included
Driver / Trafo inbegrepen
Driver / Trafo incorporé
Driver / Trafo inclusive

Driver / Trafo not included
Driver / Trafo niet inbegrepen
Driver / Trafo n'est pas incorporé
Driver / Trafo nicht inclusive

Indoor use
Binnengebruik
Usage intérieure
Verwendung im Innenbereich

Outdoor use
Buitengebruik
Usage extérieure
Außeneinsatz

Fixture class 1
Toestel klasse 1
Appareil classe 1
Gerät Klasse 1

III

Fixture class 3
Toestel klasse 3
Appareil classe 3
Gerät Klasse 3

Dimmable on product
Dimbaar op toestel
Dimmable sur l'appareil
Am Gerät dimmbar

...m

This product can be equipped with remotely adjustable dim function. Contact us for more information.

Dit product kan uitgerust worden met dimfunctie, instelbaar vanop afstand. Contacteer ons voor meer info.

Ce produit peut être équipé d'une fonction dim réglable à distance. Contactez-nous pour plus d'informations.

Dieses Produkt kann eingestellt werden, um aus der Ferne zu dimmen. Kontaktieren Sie uns für weitere Informationen.

DALI

This product can be equipped with DALI interface (home automation compatible). Contact us for more information.

Dit product kan uitgerust worden met DALI interface (domotica compatibel). Contacteer ons voor meer informatie.

Ce produit peut être équipé d'une interface DALI

(compatible domotique). Contactez-nous pour plus d'informations.

Dieses Produkt kann mit DALI-Schnittstelle (Home Automation kompatibel) hergestellt werden. Kontaktieren Sie uns für weitere Informationen.

CATALOGUE I PICTOGRAMS

Authentage Catalogus 2024 Authentage Katalogus 2024 Authentage Catalogue 2024 Authentage Katalog 2024 Authentage Verlichting Authentage Lighting Authentage éclairage Authentage Beleuchtung
Authentage Webshop Authentage Verlichting Authentage Armaturen Authentage Winkels Authentage Verkooppunten Authentage Verdelers Authentage Verdeelpunten Authentage België Authentage Nederland Authentage Vente en Ligne Authentage Boutique Vente en Ligne Authentage Luminaires Authentage éclairage
Authentage Revendeurs Authentage Points de vente Authentage Magasins Authentage Boutiques Authentage Points de distribution Authentage France Authentage Lighting Authentage Retailers Authentage Dealers Authentage Distributors Authentage Points of sale Authentage Resellers Authentage England
Authentage Beleuchtung Authent Beleuchtung Authentage Leuchten Authentage Händler Authentage Shops Authentage Verkaufsstellen Authentage Vertriebspartner Authentage Deutschland Authentage E-shop Authentage Geschäfte Authentage Vertriebsstellen

www.Bcosy.be - Waarschoot - België - Belgique - Belgium - Belgien tel 0032 (0) 9 378 24 30 Mail: info@bcosy.be

IP 20 | DALI | DI | F

2 integrated circuits:
1. Dim-to-warm LED-strip at the bottom for functional light.
2. Integrated LED-discs to create candle effect for atmosphere creation.

Light sources are integrated.

For control/connectivity options, see p494 accessories.



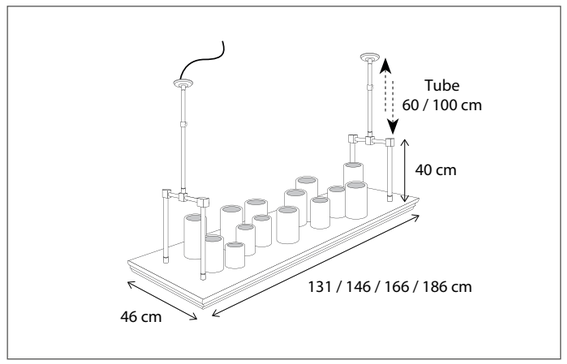

CODE	TYPE	FINISH	WATT	VOLT	FITTING
BRS012D13	Bellefeu® royal rectangular 131 cm - 12 candles wax	Bronze	12 x 2,4 + 38,8	230v	-
BRS014D15	Bellefeu® royal rectangular 146 cm - 14 candles wax	Bronze	14 x 2,4 + 42	230	-
BRS016D17	Bellefeu® royal rectangular 166 cm - 16 candles wax	Bronze	16 x 2,4 + 48	230	-
BRS018D19	Bellefeu® royal rectangular 186 cm - 18 candles wax	Bronze	18 x 2,4 + 58	230	-
BRA012D13	Bellefeu® royal rectangular 131 cm - 12 candles alabaster	Bronze	12 x 2,4 + 38,8	230	-
BRA014D15	Bellefeu® royal rectangular 146 cm - 14 candles alabaster	Bronze	14 x 2,4 + 42	230	-
BRA016D17	Bellefeu® royal rectangular 166 cm - 16 candles alabaster	Bronze	16 x 2,4 + 48	230	-
BRA018D19	Bellefeu® royal rectangular 186 cm - 18 candles alabaster	Bronze	18 x 2,4 + 58	230	-

SCAN & DISCOVER
THE BELLEFEU EFFECT

Contact us for:
Customization & connectivity

BELLEFEU® ROYAL
RECTANGULAR

SUSPENSION

IP 20 | DALI | DI | F

2 circuits:
1. GU10 LED spots at the bottom for functional light (light source excluded).
2. Integrated LED-discs to create candle effect for atmosphere creation.

For control/connectivity options, see p494 accessories.

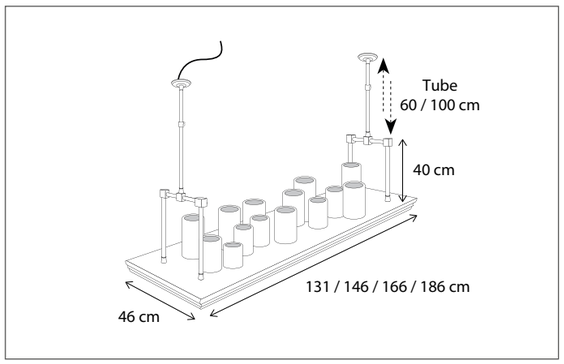



CODE	TYPE	FINISH	WATT	VOLT	FITTING
BRS012G13	Bellefeu® royal rectangular 131 cm - 12 candles wax - 2 GU10 spots	Bronze	12 x 2,4 + 2 x 8	230	GU10
BRS014G15	Bellefeu® royal rectangular 146 cm - 14 candles wax - 3 GU10 spots	Bronze	14 x 2,4 + 3 x 8	230	GU10
BRS016G17	Bellefeu® royal rectangular 166 cm - 16 candles wax - 4 GU10 spots	Bronze	16 x 2,4 + 4 x 8	230	GU10
BRS018G19	Bellefeu® royal rectangular 186 cm - 18 candles wax - 4 GU10 spots	Bronze	18 x 2,4 + 4 x 8	230	GU10
BRA012G13	Bellefeu® royal rectangular 131 cm - 12 candles alabaster - 2 GU10 spots	Bronze	12 x 2,4 + 2 x 8	230	GU10
BRA014G15	Bellefeu® royal rectangular 146 cm - 14 candles alabaster - 3 GU10 spots	Bronze	14 x 2,4 + 3 x 8	230	GU10
BRA016G17	Bellefeu® royal rectangular 166 cm - 16 candles alabaster - 4 GU10 spots	Bronze	16 x 2,4 + 4 x 8	230	GU10
BRA018G19	Bellefeu® royal rectangular 186 cm - 18 candles alabaster - 4 GU10 spots	Bronze	18 x 2,4 + 4 x 8	230	GU10

Contact us for:
Customization & connectivity

Authentage Catalogus 2024 Authentage Katalogus 2024 Authentage Catalogue 2024 Authentage Katalog 2024 Authentage Verlichting Authentage Lighting Authentage éclairage Authentage Beleuchtung
Authentage Webshop Authentage Verlichting Authentage Armaturen Authentage Winkels Authentage Verkooppunten Authentage Verdelers Authentage Verdeelpunten Authentage België Authentage Nederland Authentage Vente en Ligne Authentage Boutique Vente en Ligne Authentage Luminaires Authentage éclairage
Authentage Revendeurs Authentage Points de vente Authentage Magasins Authentage Boutiques Authentage Points de distribution Authentage France Authentage Lighting Authentage Retailers Authentage Dealers Authentage Distributors Authentage Points of sale Authentage Resellers Authentage England
Authentage Beleuchtung Authent Beleuchtung Authentage Leuchten Authentage Händler Authentage Shops Authentage Verkaufsstellen Authentage Vertriebspartner Authentage Deutschland Authentage E-shop Authentage Geschäfte Authentage Vertriebsstellen

www.Bcosy.be - Waarschoot - België - Belgique - Belgium - Belgien tel 0032 (0) 9 378 24 30 Mail: info@bcosy.be

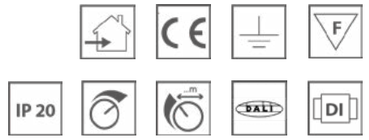

2 circuits:
1. GU10 LED spots at the bottom for functional light (light source excluded).
2. Integrated LED-discs to create candle effect for atmosphere creation.

For control/connectivity options, see p494 accessories.



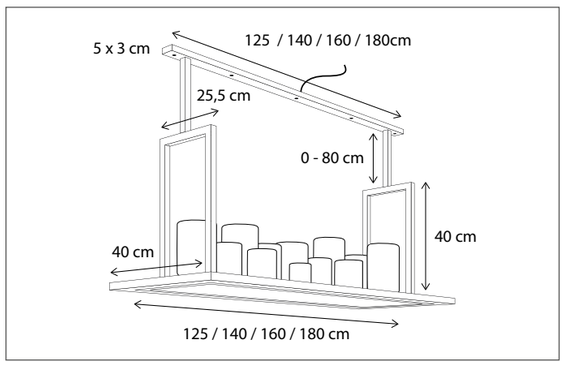

BELLEFEU®
RECTANGULAR

SUSPENSION

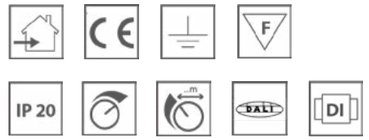

2 circuits:
1. GU10 LED spots at the bottom for functional light (light source excluded).
2. Integrated LED-discs to create candle effect for atmosphere creation.

For control/connectivity options, see p494 accessories.

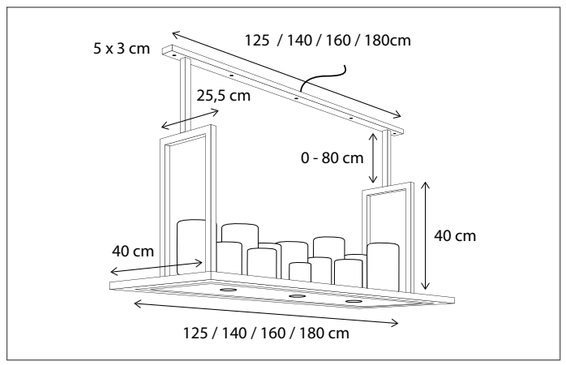



CODE	TYPE	FINISH	WATT	VOLT	FITTING
BSR012D12	Bellefeu® rectangular 125 cm - 12 candles wax	Bronze	12 x 2,4 + 38,8	230	-
BSR014D14	Bellefeu® rectangular 140 cm - 14 candles wax	Bronze	14 x 2,4 + 42	230	-
BSR016D16	Bellefeu® rectangular 160 cm - 16 candles wax	Bronze	16 x 2,4 + 48	230	-
BSR018D18	Bellefeu® rectangular 180 cm - 18 candles wax	Bronze	18 x 2,4 + 58	230	-
BAR012D12	Bellefeu® rectangular 125 cm - 12 candles alabaster	Bronze	12 x 2,4 + 38,8	230	-
BAR014D14	Bellefeu® rectangular 140 cm - 14 candles alabaster	Bronze	14 x 2,4 + 42	230	-
BAR016D16	Bellefeu® rectangular 160 cm - 16 candles alabaster	Bronze	16 x 2,4 + 48	230	-
BAR018D18	Bellefeu® rectangular 180 cm - 18 candles alabaster	Bronze	18 x 2,4 + 58	230	-

CODE	TYPE	FINISH	WATT	VOLT	FITTING
BSR012G12	Bellefeu® rectangular 125 cm - 12 candles wax - 2 GU10 spots	Bronze	12 x 2,4 + 2 x 8	230	GU10
BSR014G14	Bellefeu® rectangular 140 cm - 14 candles wax - 3 GU10 spots	Bronze	14 x 2,4 + 3 x 8	230	GU10
BSR016G16	Bellefeu® rectangular 160 cm - 16 candles wax - 4 GU10 spots	Bronze	16 x 2,4 + 4 x 8	230	GU10
BSR018G18	Bellefeu® rectangular 180 cm - 18 candles wax - 4 GU10 spots	Bronze	18 x 2,4 + 4 x 8	230	GU10
BAR012G12	Bellefeu® rectangular 125 cm - 12 candles alabaster - 2 GU10 spots	Bronze	12 x 2,4 + 2 x 8	230	GU10
BAR014G14	Bellefeu® rectangular 140 cm - 14 candles alabaster - 3 GU10 spots	Bronze	14 x 2,4 + 3 x 8	230	GU10
BAR016G16	Bellefeu® rectangular 160 cm - 16 candles alabaster - 4 GU10 spots	Bronze	16 x 2,4 + 4 x 8	230	GU10
BAR018G18	Bellefeu® rectangular 180 cm - 18 candles alabaster - 4 GU10 spots	Bronze	18 x 2,4 + 4 x 8	230	GU10

SCAN & DISCOVER
THE BELLEFEU EFFECT

Contact us for:
Customization & connectivity

Contact us for:
Customization & connectivity

Authentage Catalogus 2024 Authentage Katalogus 2024 Authentage Catalogue 2024 Authentage Katalog 2024 Authentage Verlichting Authentage Lighting Authentage éclairage Authentage Beleuchtung
Authentage Webshop Authentage Verlichting Authentage Armaturen Authentage Winkels Authentage Verkooppunten Authentage Verdelers Authentage Verdeelpunten Authentage België Authentage Nederland Authentage Vente en Ligne Authentage Boutique Vente en Ligne Authentage Luminaires Authentage éclairage
Authentage Revendeurs Authentage Points de vente Authentage Magasins Authentage Boutiques Authentage Points de distribution Authentage France Authentage Lighting Authentage Retailers Authentage Dealers Authentage Distributors Authentage Points of sale Authentage Resellers Authentage England
Authentage Beleuchtung Authent Beleuchtung Authentage Leuchten Authentage Händler Authentage Shops Authentage Verkaufsstellen Authentage Vertriebspartner Authentage Deutschland Authentage E-shop Authentage Geschäfte Authentage Vertriebsstellen

www.Bcosy.be - Waarschoot - België - Belgique - Belgium - Belgien tel 0032 (0) 9 378 24 30 Mail: info@bcosy.be

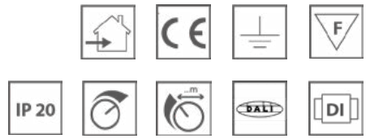

2 circuits:
1. GU10 LED spots at the bottom for functional light (light source excluded).
2. Integrated LED-discs to create candle effect for atmosphere creation.

For control/connectivity options, see p494 accessories.



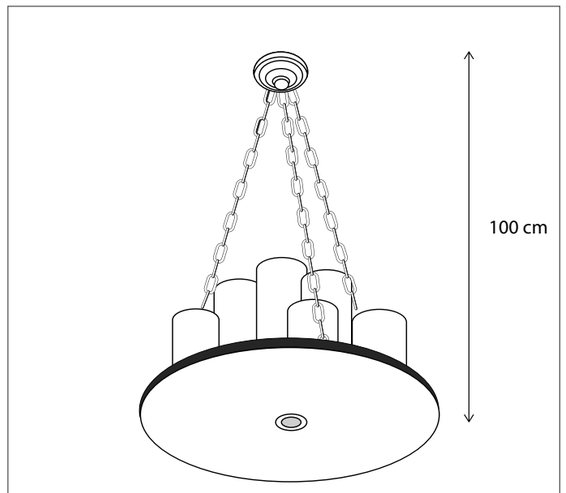

CODE	TYPE	FINISH	WATT	VOLT	FITTING
BCS007R05	Bellefeu® château 50 cm - 7 candles wax + 1 spot	Bronze	7 x 2,4 + 8	230	GU10
BCS012R07	Bellefeu® château 75 cm - 12 candles wax + 4 spots	Bronze	12 x 2,4 + 4 x 8	230	GU10
BAS007R05	Bellefeu® château 50 cm - 7 candles alabaster + 1 spot	Bronze	7 x 2,4 + 8	230	GU10
BAS012R07	Bellefeu® château 75 cm - 12 candles alabaster + 4 spots	Bronze	12 x 2,4 + 4 x 8	230	GU10

SCAN & DISCOVER
THE BELLEFEU EFFECT

Contact us for:
Customization & connectivity

BELLEFEU® CHATEAU

SUSPENSION

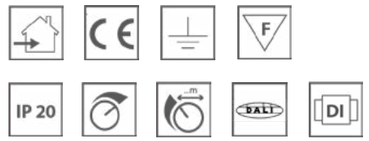

2 circuits:
1. GU10 LED spots at the bottom for functional light (light source excluded).
2. Integrated LED-discs to create candle effect for atmosphere creation.

For control/connectivity options, see p494 accessories.

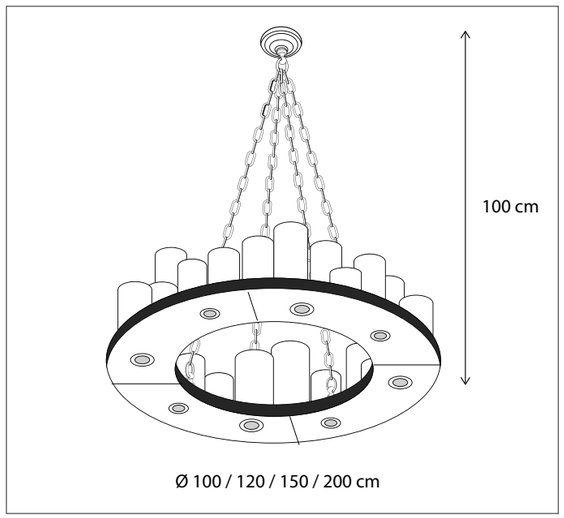



CODE	TYPE	FINISH	WATT	VOLT	FITTING
BCS020R10	Bellefeu® château 100 cm - 20 candles wax + 4 spots	Bronze	20 x 2,4 + 4 x 8	230	GU10
BCS024R12	Bellefeu® château 120 cm - 24 candles wax + 6 spots	Bronze	24 x 2,4 + 6 x 8	230	GU10
BCS032R15	Bellefeu® château 150 cm - 32 candles wax + 8 spots	Bronze	32 x 2,4 + 8 x 8	230	GU10
BCS048R20	Bellefeu® château 200 cm - 48 candles wax + 12 spots	Bronze	48 x 2,4 + 12 x 8	230	GU10
BAS020R10	Bellefeu® château 100 cm - 20 candles alabaster + 4 spots	Bronze	20 x 2,4 + 4 x 8	230	GU10
BAS024R12	Bellefeu® château 120 cm - 24 candles alabaster + 6 spots	Bronze	24 x 2,4 + 6 x 8	230	GU10
BAS032R15	Bellefeu® château 150 cm - 32 candles alabaster + 8 spots	Bronze	32 x 2,4 + 8 x 8	230	GU10
BAS048R20	Bellefeu® château 200 cm - 40 candles alabaster + 12 spots	Bronze	40 x 2,4 + 12 x 8	230	GU10

Contact us for:
Customization & connectivity

INDOOR I SUSPENSION I BELLEFEU®

Authentage Catalogus 2024 Authentage Katalogus 2024 Authentage Catalogue 2024 Authentage Katalog 2024 Authentage Verlichting Authentage Lighting Authentage éclairage Authentage Beleuchtung
Authentage Webshop Authentage Verlichting Authentage Armaturen Authentage Winkels Authentage Verkooppunten Authentage Verdelers Authentage Verdeelpunten Authentage België Authentage Nederland Authentage Vente en Ligne Authentage Boutique Vente en Ligne Authentage Luminaires Authentage éclairage
Authentage Revendeurs Authentage Points de vente Authentage Magasins Authentage Boutiques Authentage Points de distribution Authentage France Authentage Lighting Authentage Retailers Authentage Dealers Authentage Distributors Authentage Points of sale Authentage Resellers Authentage England
Authentage Beleuchtung Authent Beleuchtung Authentage Leuchten Authentage Händler Authentage Shops Authentage Verkaufsstellen Authentage Vertriebspartner Authentage Deutschland Authentage E-shop Authentage Geschäfte Authentage Vertriebsstellen

www.Bcosy.be - Waarschoot - België - Belgique - Belgium - Belgien tel 0032 (0) 9 378 24 30 Mail: info@bcosy.be

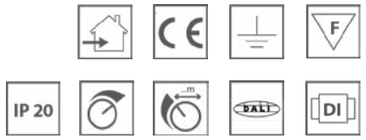

Integrated push dimmer for adjustable candle effect.

For control/connectivity options, see p494 accessories.



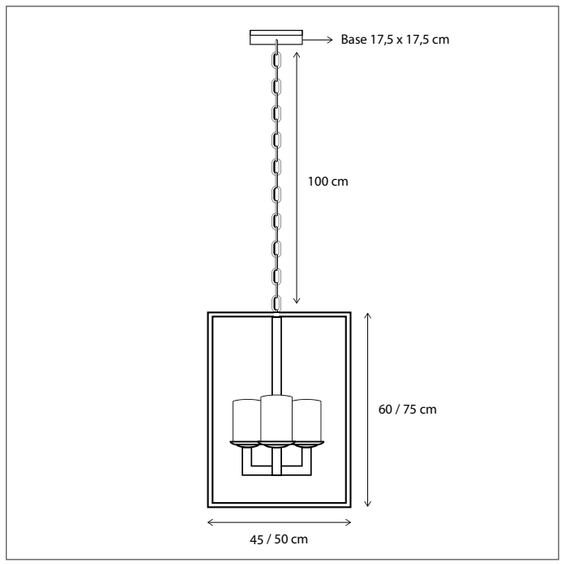

CODE	TYPE	FINISH	WATT	VOLT	FITTING
BVL004D60	Bellefeu® vitrine lantern suspension medium - 4 candles wax	Bronze	4 x 2,4	230	-
BVL004D75	Bellefeu® vitrine lantern suspension large - 4 candles wax	Bronze	4 x 2,4	230	-
BVL104D60	Bellefeu® vitrine lantern suspension medium - 4 candles wax	Brushed nickel	4 x 2,4	230	-
BVL104D75	Bellefeu® vitrine lantern suspension large - 4 candles wax	Brushed nickel	4 x 2,4	230	-
BVL204D60	Bellefeu® vitrine lantern suspension medium - 4 candles wax	Chrome	4 x 2,4	230	-
BVL204D75	Bellefeu® vitrine lantern suspension large - 4 candles wax	Chrome	4 x 2,4	230	-

Contact us for:

Customization & connectivity

BELLEFEU® VITRINE LANTERN

SUSPENSION

CODE	TYPE	FINISH	WATT	VOLT	FITTING
BAL004D60	Bellefeu® vitrine lantern suspension medium - 4 candles alabaster	Bronze	4 x 2,4	230	-
BAL004D75	Bellefeu® vitrine lantern suspension large - 4 candles alabaster	Bronze	4 x 2,4	230	-
BAL104D60	Bellefeu® vitrine lantern suspension medium - 4 candles alabaster	Brushed nickel	4 x 2,4	230	-
BAL104D75	Bellefeu® vitrine lantern suspension large - 4 candles alabaster	Brushed nickel	4 x 2,4	230	-
BAL204D60	Bellefeu® vitrine lantern suspension medium - 4 candles alabaster	Chrome	4 x 2,4	230	-
BAL204D75	Bellefeu® vitrine lantern suspension large - 4 candles alabaster	Chrome	4 x 2,4	230	-

Contact us for:

Customization & connectivity

SCAN & DISCOVER

THE BELLEFEU EFFECT

Authentage Catalogus 2024 Authentage Katalogus 2024 Authentage Catalogue 2024 Authentage Katalog 2024 Authentage Verlichting Authentage Lighting Authentage éclairage Authentage Beleuchtung
Authentage Webshop Authentage Verlichting Authentage Armaturen Authentage Winkels Authentage Verkooppunten Authentage Verdelers Authentage Verdeelpunten Authentage België Authentage Nederland Authentage Vente en Ligne Authentage Boutique Vente en Ligne Authentage Luminaires Authentage éclairage
Authentage Revendeurs Authentage Points de vente Authentage Magasins Authentage Boutiques Authentage Points de distribution Authentage France Authentage Lighting Authentage Retailers Authentage Dealers Authentage Distributors Authentage Points of sale Authentage Resellers Authentage England
Authentage Beleuchtung Authent Beleuchtung Authentage Leuchten Authentage Händler Authentage Shops Authentage Verkaufsstellen Authentage Vertriebspartner Authentage Deutschland Authentage E-shop Authentage Geschäfte Authentage Vertriebsstellen

www.Bcosy.be - Waarschoot - België - Belgique - Belgium - Belgien tel 0032 (0) 9 378 24 30 Mail: info@bcosy.be

BELLEFEU® QUADRE

SUSPENSION

IP 20 | DALI | DI

Integrated push dimmer for adjustable candle effect.

For control/connectivity options, see p494 accessories.



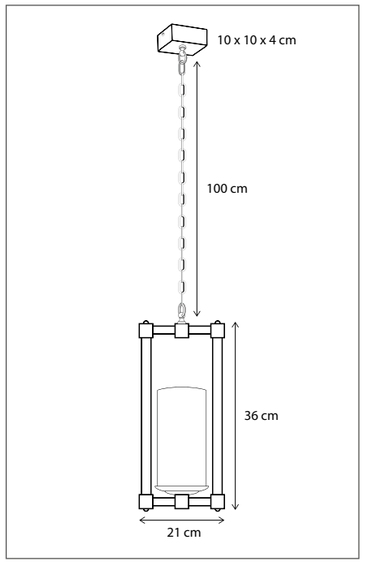

CODE	TYPE	FINISH	WATT	VOLT	FITTING
BQS001V10	Bellefeu® quadre - 1 candle wax	Bronze	2,4	230	-
BAS001V10	Bellefeu® quadre - 1 candle alabaster	Bronze	2,4	230	-

BELLEFEU® CARRÉ

SUSPENSION

IP 20 | DALI | DI

2 integrated circuits:
1. Dim-to-warm LED-strip at the bottom for functional light.
2. Integrated LED-discs to create candle effect for atmosphere creation.

Light sources are integrated.

For control/connectivity options, see p494 accessories.

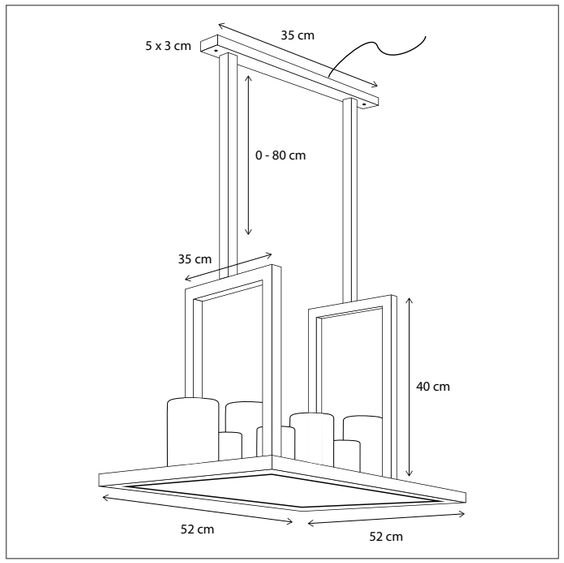



CODE	TYPE	FINISH	WATT	VOLT	FITTING
BSC007D52	Bellefeu® carré - 7 candles wax	Bronze	7 x 2,4 + 23,6	230	-
BAC007D52	Bellefeu® carré - 7 candles alabaster	Bronze	7 x 2,4 + 23,6	230	-

SCAN & DISCOVER
THE BELLEFEU EFFECT

Contact us for:
Customization & connectivity

Contact us for:
Customization & connectivity

INDOOR I SUSPENSION I BELLEFEU®

Authentage Catalogus 2024 Authentage Katalogus 2024 Authentage Catalogue 2024 Authentage Katalog 2024 Authentage Verlichting Authentage Lighting Authentage éclairage Authentage Beleuchtung
Authentage Webshop Authentage Verlichting Authentage Armaturen Authentage Winkels Authentage Verkooppunten Authentage Verdelers Authentage Verdeelpunten Authentage België Authentage Nederland Authentage Vente en Ligne Authentage Boutique Vente en Ligne Authentage Luminaires Authentage éclairage
Authentage Revendeurs Authentage Points de vente Authentage Magasins Authentage Boutiques Authentage Points de distribution Authentage France Authentage Lighting Authentage Retailers Authentage Dealers Authentage Distributors Authentage Points of sale Authentage Resellers Authentage England
Authentage Beleuchtung Authent Beleuchtung Authentage Leuchten Authentage Händler Authentage Shops Authentage Verkaufsstellen Authentage Vertriebspartner Authentage Deutschland Authentage E-shop Authentage Geschäfte Authentage Vertriebsstellen

www.Bcosy.be - Waarschoot - België - Belgique - Belgium - Belgien tel 0032 (0) 9 378 24 30 Mail: info@bcosy.be

IP 20

Integrated push dimmer for adjustable candle effect.

For control/connectivity options, see p494 accessories.



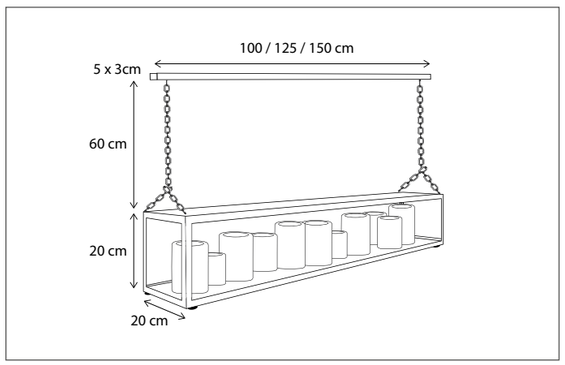

CODE	TYPE	FINISH	WATT	VOLT	FITTING
BVS009D10	Bellefeu® vitrine long suspension 100 cm - 9 candles wax	Bronze	9 x 2,4	230	-
BVS011D12	Bellefeu® vitrine long suspension 125 cm - 11 candles wax	Bronze	11 x 2,4	230	-
BVS014D15	Bellefeu® vitrine long suspension 150 cm - 14 candles wax	Bronze	14 x 2,4	230	-
BVS109D10	Bellefeu® vitrine long suspension 100 cm - 9 candles wax	Brushed nickel	9 x 2,4	230	-
BVS111D12	Bellefeu® vitrine long suspension 125 cm - 11 candles wax	Brushed nickel	11 x 2,4	230	-
BVS114D15	Bellefeu® vitrine long suspension 150 cm - 14 candles wax	Brushed nickel	14 x 2,4	230	-
BVS209D10	Bellefeu® vitrine long suspension 100 cm - 9 candles wax	Chrome	9 x 2,4	230	-
BVS211D12	Bellefeu® vitrine long suspension 125 cm - 11 candles wax	Chrome	11 x 2,4	230	-
BVS214D15	Bellefeu® vitrine long suspension 150 cm - 14 candles wax	Chrome	14 x 2,4	230	-

SCAN & DISCOVER
THE BELLEFEU EFFECT

Contact us for:
Customization & connectivity

BELLEFEU®
VITRINE LONG

SUSPENSION

CODE	TYPE	FINISH	WATT	VOLT	FITTING
BAS009D10	Bellefeu® vitrine long suspension 100 cm - 9 candles alabaster	Bronze	9 x 2,4	230	-
BAS011D12	Bellefeu® vitrine long suspension 125 cm - 11 candles alabaster	Bronze	11 x 2,4	230	-
BAS014D15	Bellefeu® vitrine long suspension 150 cm - 14 candles alabaster	Bronze	14 x 2,4	230	-
BAS109D10	Bellefeu® vitrine long suspension 100 cm - 9 candles alabaster	Brushed nickel	9 x 2,4	230	-
BAS111D12	Bellefeu® vitrine long suspension 125 cm - 11 candles alabaster	Brushed nickel	11 x 2,4	230	-
BAS114D15	Bellefeu® vitrine long suspension 150 cm - 14 candles alabaster	Brushed nickel	14 x 2,4	230	-
BAS209D10	Bellefeu® vitrine long suspension 100 cm - 9 candles alabaster	Chrome	9 x 2,4	230	-
BAS211D12	Bellefeu® vitrine long suspension 125 cm - 11 candles alabaster	Chrome	11 x 2,4	230	-
BAS214D15	Bellefeu® vitrine long suspension 150 cm - 14 candles alabaster	Chrome	14 x 2,4	230	-

Contact us for:
Customization & connectivity

INDOOR I SUSPENSION I BELLEFEU®

Authentage Catalogus 2024 Authentage Katalogus 2024 Authentage Catalogue 2024 Authentage Katalog 2024 Authentage Verlichting Authentage Lighting Authentage éclairage Authentage Beleuchtung
Authentage Webshop Authentage Verlichting Authentage Armaturen Authentage Winkels Authentage Verkooppunten Authentage Verdelers Authentage Verdeelpunten Authentage België Authentage Nederland Authentage Vente en Ligne Authentage Boutique Vente en Ligne Authentage Luminaires Authentage éclairage
Authentage Revendeurs Authentage Points de vente Authentage Magasins Authentage Boutiques Authentage Points de distribution Authentage France Authentage Lighting Authentage Retailers Authentage Dealers Authentage Distributors Authentage Points of sale Authentage Resellers Authentage England
Authentage Beleuchtung Authent Beleuchtung Authentage Leuchten Authentage Händler Authentage Shops Authentage Verkaufsstellen Authentage Vertriebspartner Authentage Deutschland Authentage E-shop Authentage Geschäfte Authentage Vertriebsstellen

www.Bcosy.be - Waarschoot - België - Belgique - Belgium - Belgien tel 0032 (0) 9 378 24 30 Mail: info@bcosy.be

VITRINE LONG CHAIN

SUSPENSION



Lamps not included, consult light source guide for our advice.



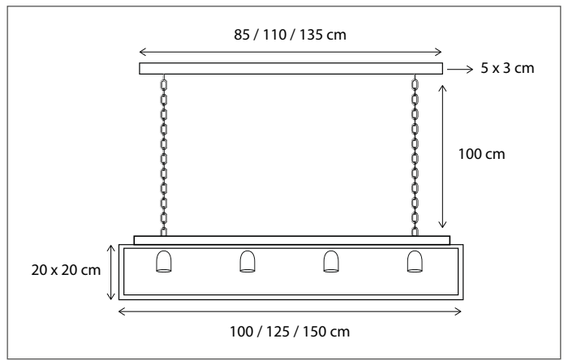

CODE	TYPE	FINISH	WATT	VOLT	FITTING
VIT003600	Vitrine suspension long chain 100 cm - 3L	Bronze	15	230	E27
VIT004600	Vitrine suspension long chain 125 cm - 4L	Bronze	15	230	E27
VIT005600	Vitrine suspension long chain 150 cm - 5L	Bronze	15	230	E27
VIT006600	Vitrine suspension long chain 175 cm - 6L	Bronze	15	230	E27
VIT103600	Vitrine suspension long chain 100 cm - 3L	Brushed nickel	15	230	E27
VIT104600	Vitrine suspension long chain 125 cm - 4L	Brushed nickel	15	230	E27
VIT105600	Vitrine suspension long chain 150 cm - 5L	Brushed nickel	15	230	E27
VIT106600	Vitrine suspension long chain 175 cm - 6L	Brushed nickel	15	230	E27
VIT203600	Vitrine suspension long chain 100 cm - 3L	Chrome	15	230	E27
VIT204600	Vitrine suspension long chain 125 cm - 4L	Chrome	15	230	E27
VIT205600	Vitrine suspension long chain 150 cm - 5L	Chrome	15	230	E27
VIT206600	Vitrine suspension long chain 175 cm - 6L	Chrome	15	230	E27

Contact us for:

Customization & connectivity

VITRINE LONG TUBE

SUSPENSION



Lamps not included, consult light source guide for our advice.

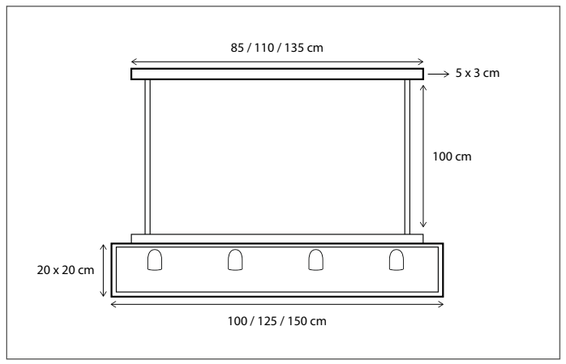



CODE	TYPE	FINISH	WATT	VOLT	FITTING
VIT003650	Vitrine suspension long tube 100 cm - 3L	Bronze	15	230	E27
VIT004650	Vitrine suspension long tube 125 cm - 4L	Bronze	15	230	E27
VIT005650	Vitrine suspension long tube 150 cm - 5L	Bronze	15	230	E27
VIT103650	Vitrine suspension long tube 100 cm - 3L	Brushed nickel	15	230	E27
VIT104650	Vitrine suspension long tube 125 cm - 4L	Brushed nickel	15	230	E27
VIT105650	Vitrine suspension long tube 150 cm - 5L	Brushed nickel	15	230	E27
VIT203650	Vitrine suspension long tube 100 cm - 3L	Chrome	15	230	E27
VIT204650	Vitrine suspension long tube 125 cm - 4L	Chrome	15	230	E27
VIT205650	Vitrine suspension long tube 150 cm - 5L	Chrome	15	230	E27

Contact us for:

Customization & connectivity

Authentage Catalogus 2024 Authentage Katalogus 2024 Authentage Catalogue 2024 Authentage Katalog 2024 Authentage Verlichting Authentage Lighting Authentage éclairage Authentage Beleuchtung
Authentage Webshop Authentage Verlichting Authentage Armaturen Authentage Winkels Authentage Verkooppunten Authentage Verdelers Authentage Verdeelpunten Authentage België Authentage Nederland Authentage Vente en Ligne Authentage Boutique Vente en Ligne Authentage Luminaires Authentage éclairage
Authentage Revendeurs Authentage Points de vente Authentage Magasins Authentage Boutiques Authentage Points de distribution Authentage France Authentage Lighting Authentage Retailers Authentage Dealers Authentage Distributors Authentage Points of sale Authentage Resellers Authentage England
Authentage Beleuchtung Authent Beleuchtung Authentage Leuchten Authentage Händler Authentage Shops Authentage Verkaufsstellen Authentage Vertriebspartner Authentage Deutschland Authentage E-shop Authentage Geschäfte Authentage Vertriebsstellen

www.Bcosy.be - Waarschoot - België - Belgique - Belgium - Belgien tel 0032 (0) 9 378 24 30 Mail: info@bcosy.be

VITRINE LONG + INTEGRATED LED

SUSPENSION

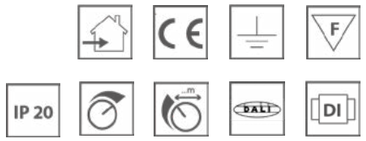

2 circuits standard available:
1. Integrated Dim-to-warm LED-strip in vitrine
2. Decorative LED filament bulbs (not included, consult light source guide for our advice)



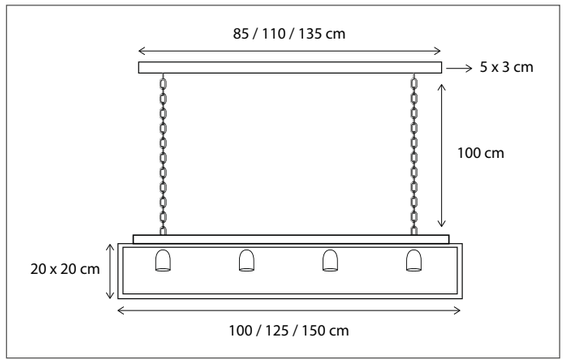

CODE	TYPE	FINISH	WATT	VOLT	FITTING
VIL023700	Vitrine suspension long + integrated LED 100 cm - 3L	Bronze	3 x 15 + 28,8	230	E27
VIL024700	Vitrine suspension long + integrated LED 125 cm - 4L	Bronze	4 x 15 + 38	230	E27
VIL025700	Vitrine suspension long + integrated LED 150 cm - 5L	Bronze	5 x 15 + 44	230	E27
VIL123700	Vitrine suspension long + integrated LED 100 cm - 3L	Brushed nickel	3 x 15 + 28,8	230	E27
VIL124700	Vitrine suspension long + integrated LED 125 cm - 4L	Brushed nickel	4 x 15 + 38	230	E27
VIL125700	Vitrine suspension long + integrated LED 150 cm - 5L	Brushed nickel	5 x 15 + 44	230	E27
VIL223700	Vitrine suspension long + integrated LED 100 cm - 3L	Chrome	3 x 15 + 28,8	230	E27
VIL224700	Vitrine suspension long + integrated LED 125 cm - 4L	Chrome	4 x 15 + 38	230	E27
VIL225700	Vitrine suspension long + integrated LED 150 cm - 5L	Chrome	5 x 15 + 44	230	E27

Contact us for:
Customization & connectivity

VITRINE LANTERN 1L

SUSPENSION



Lamps not included, consult light source guide for our advice.

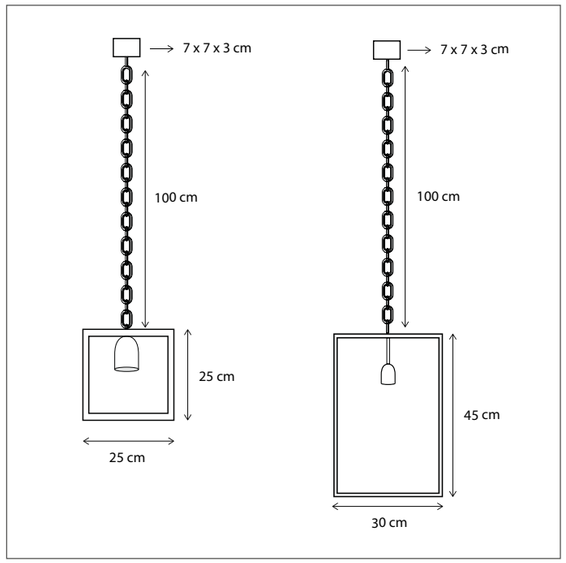



CODE	TYPE	FINISH	WATT	VOLT	FITTING
VIT001625	Vitrine lantern small 1L	Bronze	15	230	E27
VIT001600	Vitrine lantern 1L	Bronze	15	230	E27
VIT101625	Vitrine lantern small 1L	Brushed nickel	15	230	E27
VIT101600	Vitrine lantern 1L	Brushed nickel	15	230	E27
VIT201625	Vitrine lantern small 1L	Chrome	15	230	E27
VIT201600	Vitrine lantern 1L	Chrome	15	230	E27

Contact us for:
Customization & connectivity

Authentage Catalogus 2024 Authentage Katalogus 2024 Authentage Catalogue 2024 Authentage Katalog 2024 Authentage Verlichting Authentage Lighting Authentage éclairage Authentage Beleuchtung
Authentage Webshop Authentage Verlichting Authentage Armaturen Authentage Winkels Authentage Verkooppunten Authentage Verdelers Authentage Verdeelpunten Authentage België Authentage Nederland Authentage Vente en Ligne Authentage Boutique Vente en Ligne Authentage Luminaires Authentage éclairage
Authentage Revendeurs Authentage Points de vente Authentage Magasins Authentage Boutiques Authentage Points de distribution Authentage France Authentage Lighting Authentage Retailers Authentage Dealers Authentage Distributors Authentage Points of sale Authentage Resellers Authentage England
Authentage Beleuchtung Authent Beleuchtung Authentage Leuchten Authentage Händler Authentage Shops Authentage Verkaufsstellen Authentage Vertriebspartner Authentage Deutschland Authentage E-shop Authentage Geschäfte Authentage Vertriebsstellen

www.Bcosy.be - Waarschoot - België - Belgique - Belgium - Belgien tel 0032 (0) 9 378 24 30 Mail: info@bcosy.be

VITRINE LANTERN 4L

SUSPENSION



Lamps not included, consult light source guide for our advice.



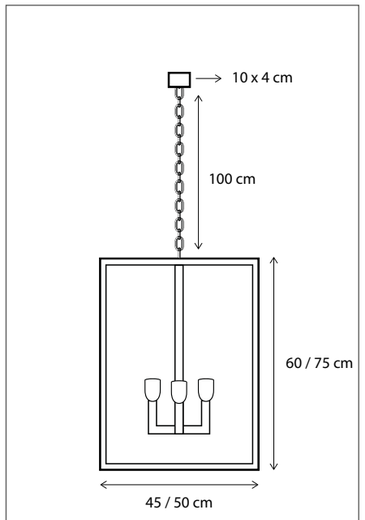

CODE	TYPE	FINISH	WATT	VOLT	FITTING
VIT004602	Vitrine lantern 4L medium	Bronze	4 x 15	230	E27
VIT004604	Vitrine lantern 4L large	Bronze	4 x 15	230	E27
VIT104602	Vitrine lantern 4L medium	Brushed nickel	4 x 15	230	E27
VIT104604	Vitrine lantern 4L large	Brushed nickel	4 x 15	230	E27
VIT204602	Vitrine lantern 4L medium	Chrome	4 x 15	230	E27
VIT204604	Vitrine lantern 4L large	Chrome	4 x 15	230	E27

Contact us for:
Customization & connectivity

VITRINE PETITE LONG CHAIN

SUSPENSION

Lamps not included, consult light source guide for our advice.

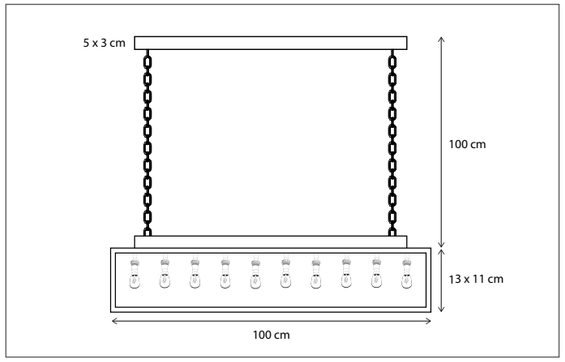



CODE	TYPE	FINISH	WATT	VOLT	FITTING
VIP010700	Vitrine petite long chain 10L	Bronze	10 x 6	230	BA15d
VIP110700	Vitrine petite long chain 10L	Brushed nickel	10 x 6	230	BA15d
VIP210700	Vitrine petite long chain 10L	Chrome	10 x 6	230	BA15d

Contact us for:
Customization & connectivity

INDOOR I SUSPENSION I VITRINE

Authentage Catalogus 2024 Authentage Katalogus 2024 Authentage Catalogue 2024 Authentage Katalog 2024 Authentage Verlichting Authentage Lighting Authentage éclairage Authentage Beleuchtung
Authentage Webshop Authentage Verlichting Authentage Armaturen Authentage Winkels Authentage Verkooppunten Authentage Verdelers Authentage Verdeelpunten Authentage België Authentage Nederland Authentage Vente en Ligne Authentage Boutique Vente en Ligne Authentage Luminaires Authentage éclairage
Authentage Revendeurs Authentage Points de vente Authentage Magasins Authentage Boutiques Authentage Points de distribution Authentage France Authentage Lighting Authentage Retailers Authentage Dealers Authentage Distributors Authentage Points of sale Authentage Resellers Authentage England
Authentage Beleuchtung Authent Beleuchtung Authentage Leuchten Authentage Händler Authentage Shops Authentage Verkaufsstellen Authentage Vertriebspartner Authentage Deutschland Authentage E-shop Authentage Geschäfte Authentage Vertriebsstellen

www.Bcosy.be - Waarschoot - België - Belgique - Belgium - Belgien tel 0032 (0) 9 378 24 30 Mail: info@bcosy.be

VITRINE PETITE LONG TUBE

SUSPENSION

IP 20

Lamps not included, consult light source guide for our advice.

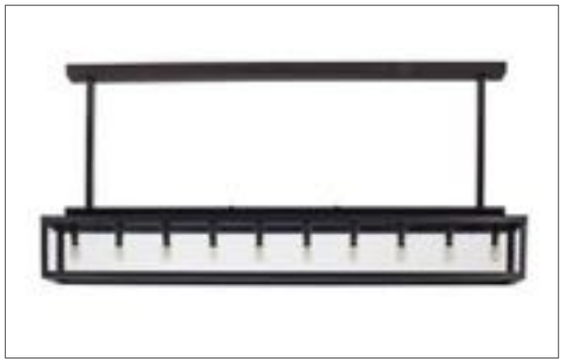

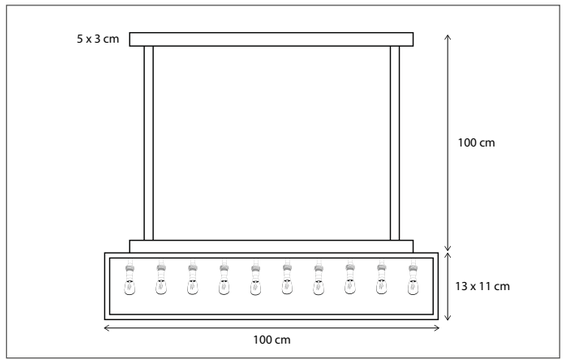

CODE	TYPE	FINISH	WATT	VOLT	FITTING
VIP010600	Vitrine petite long tube 10L	Bronze	10 x 6	230	BA15d
VIP110600	Vitrine petite long tube 10L	Brushed nickel	10 x 6	230	BA15d
VIP210600	Vitrine petite long tube 10L	Chrome	10 x 6	230	BA15d

Contact us for:

Customization & connectivity

VITRINE PETITE LANTERN

SUSPENSION

IP 20

Lamps not included, consult light source guide for our advice.

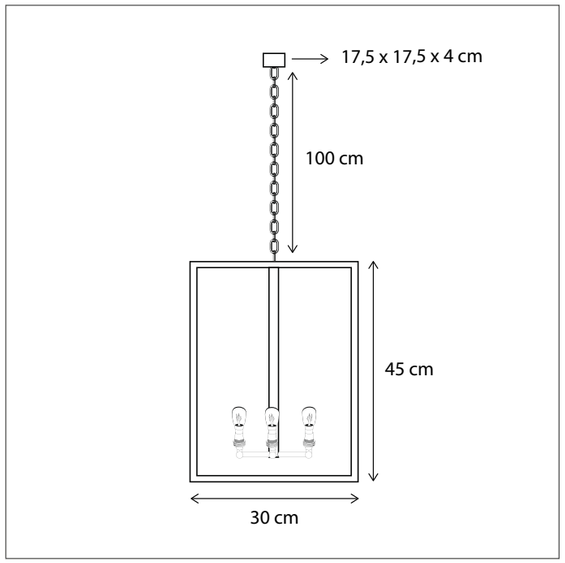



CODE	TYPE	FINISH	WATT	VOLT	FITTING
VIP004645	Vitrine petite lantern 4L	Bronze	4 x 6	230	BA15d
VIP104645	Vitrine petite lantern 4L	Brushed nickel	4 x 6	230	BA15d
VIP204645	Vitrine petite lantern 4L	Chrome	4 x 6	230	BA15d

Contact us for:

Customization & connectivity

INDOOR I SUSPENSION I VITRINE

Authentage Catalogus 2024 Authentage Katalogus 2024 Authentage Catalogue 2024 Authentage Katalog 2024 Authentage Verlichting Authentage Lighting Authentage éclairage Authentage Beleuchtung
Authentage Webshop Authentage Verlichting Authentage Armaturen Authentage Winkels Authentage Verkooppunten Authentage Verdelers Authentage Verdeelpunten Authentage België Authentage Nederland Authentage Vente en Ligne Authentage Boutique Vente en Ligne Authentage Luminaires Authentage éclairage
Authentage Revendeurs Authentage Points de vente Authentage Magasins Authentage Boutiques Authentage Points de distribution Authentage France Authentage Lighting Authentage Retailers Authentage Dealers Authentage Distributors Authentage Points of sale Authentage Resellers Authentage England
Authentage Beleuchtung Authent Beleuchtung Authentage Leuchten Authentage Händler Authentage Shops Authentage Verkaufsstellen Authentage Vertriebspartner Authentage Deutschland Authentage E-shop Authentage Geschäfte Authentage Vertriebsstellen

www.Bcosy.be - Waarschoot - België - Belgique - Belgium - Belgien tel 0032 (0) 9 378 24 30 Mail: info@bcosy.be

ECLIPS ROUND

SUSPENSION

2 integrated LED-strips (top and bottom).
For control/connectivity options, see p494 accessories.



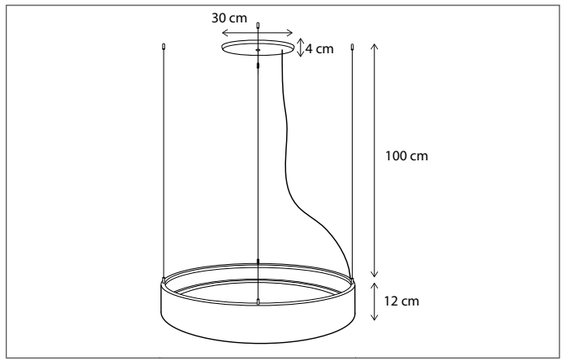

CODE	TYPE	FINISH	WATT	VOLT	FITTING
ECS05IR06	Eclips suspension round 60 cm	Bronze	2 x 21	230	-
ECS05IR08	Eclips suspension round 80 cm	Bronze	2 x 27	230	-
ECS05IR10	Eclips suspension round 100 cm	Bronze	2 x 35	230	-
ECS05IR12	Eclips suspension round 125 cm	Bronze	2 x 44	230	-
ECS05IR15	Eclips suspension round 150 cm	Bronze	2 x 53	230	-
ECS05IR20	Eclips suspension round 200 cm	Bronze	2 x 71	230	-
ECS05IR25	Eclips suspension round 250 cm	Bronze	2 x 87	230	-

Contact us for:
Customization & connectivity

ECLIPS OVAL

SUSPENSION

2 integrated LED-strips 2700K (top and bottom).
For control/connectivity options, see p494 accessories.

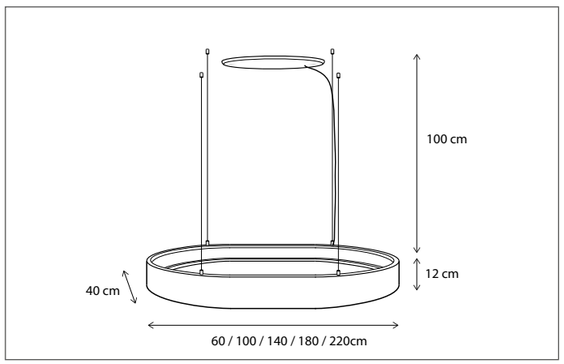

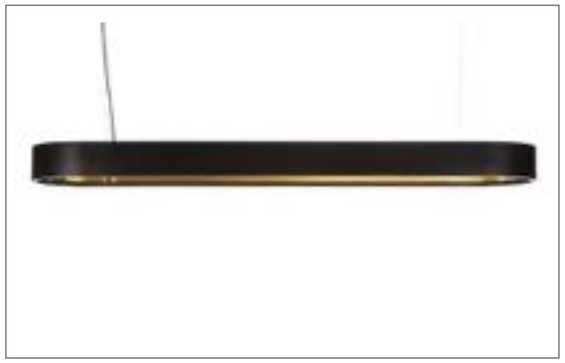

CODE	TYPE	FINISH	WATT	VOLT	FITTING
ECS05I406	Eclips suspension oval 60 cm - 40 cm	Bronze	2 x 18	230	-
ECS05I410	Eclips suspension oval 100 cm - 40 cm	Bronze	2 x 27	230	-
ECS05I414	Eclips suspension oval 140 cm - 40 cm	Bronze	2 x 38	230	-
ECS05I418	Eclips suspension oval 180 cm - 40 cm	Bronze	2 x 45	230	-
ECS05I422	Eclips suspension oval 220 cm - 40 cm	Bronze	2 x 54	230	-

Contact us for:
Customization & connectivity

INDOOR I SUSPENSION I ECLIPS

Authentage Catalogus 2024 Authentage Katalogus 2024 Authentage Catalogue 2024 Authentage Katalog 2024 Authentage Verlichting Authentage Lighting Authentage éclairage Authentage Beleuchtung
Authentage Webshop Authentage Verlichting Authentage Armaturen Authentage Winkels Authentage Verkooppunten Authentage Verdelers Authentage Verdeelpunten Authentage België Authentage Nederland Authentage Vente en Ligne Authentage Boutique Vente en Ligne Authentage Luminaires Authentage éclairage
Authentage Revendeurs Authentage Points de vente Authentage Magasins Authentage Boutiques Authentage Points de distribution Authentage France Authentage Lighting Authentage Retailers Authentage Dealers Authentage Distributors Authentage Points of sale Authentage Resellers Authentage England
Authentage Beleuchtung Authent Beleuchtung Authentage Leuchten Authentage Händler Authentage Shops Authentage Verkaufsstellen Authentage Vertriebspartner Authentage Deutschland Authentage E-shop Authentage Geschäfte Authentage Vertriebsstellen

www.Bcosy.be - Waarschoot - België - Belgique - Belgium - Belgien tel 0032 (0) 9 378 24 30 Mail: info@bcosy.be

Q - BRI

SUSPENSION



Available in 2 versions: retrofit (S14S - lamps not included, consult light source guide) or integrated LED.
Integrated LED available in 2 light levels and in Dim-to-Warm version



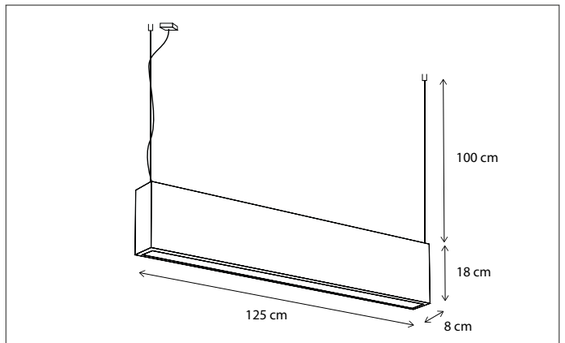

CODE	TYPE	FINISH	WATT	VOLT	FITTING
QBR002P12	Q-Bri pendant linestra 780 lumen	Bronze	2 x 20	230	S14S
QBR0L2P12	Q-Bri pendant 1298 lumen	Bronze	32	230	-
QBR0L5P12	Q-Bri pendant 2596 lumen	Bronze	64	230	-
QBR0L4D12	Q-Bri pendant 2596 lumen dim-to-warm	Bronze	64	230	-
QBR102P12	Q-Bri pendant linestra 780 lumen	Brushed nickel	2 x 20	230	S14S
QBR1L2P12	Q-Bri pendant 1298 lumen	Brushed nickel	32	230	-
QBR1L5P12	Q-Bri pendant 2596 lumen	Brushed nickel	64	230	-
QBR1L4D12	Q-Bri pendant 2596 lumen dim-to-warm	Brushed nickel	64	230	-
QBR202P12	Q-Bri pendant linestra 780 lumen	Chrome	2 x 20	230	S14S
QBR2L2P12	Q-Bri pendant 1298 lumen	Chrome	32	230	-
QBR2L5P12	Q-Bri pendant 2596 lumen	Chrome	64	230	-
QBR2L4D12	Q-Bri pendant 2596 lumen dim-to-warm	Chrome	64	230	-
QBR902P12	Q-Bri pendant linestra 780 lumen	Ready for painting	2 x 20	230	S14S
QBR9L2P12	Q-Bri pendant 1298 lumen	Ready for painting	32	230	-
QBR9L5P12	Q-Bri pendant 2596 lumen	Ready for painting	64	230	-
QBR9L4D12	Q-Bri pendant 2596 lumen dim-to-warm	Ready for painting	64	230	-

Contact us for:
Customization & connectivity

Q - BRI LANTERN

SUSPENSION

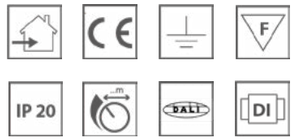

2 integrated LED-strips 2700K (top and bottom).

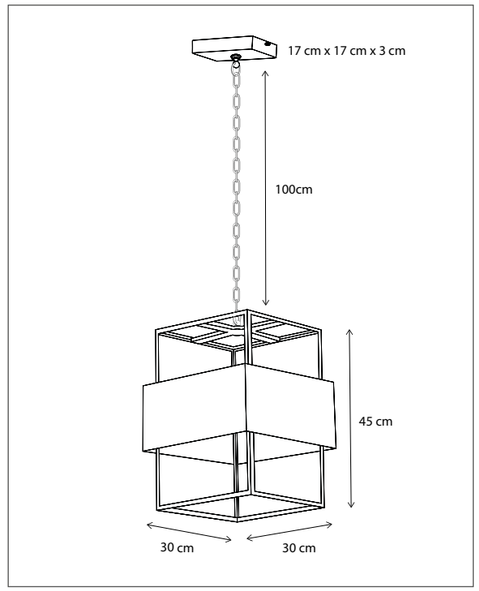



CODE	TYPE	FINISH	WATT	VOLT	FITTING
QLS0L2600	Q-Bri lantern suspension 30 x 45 cm	Bronze	32	230	-

Contact us for:
Customization & connectivity

INDOOR I SUSPENSION I Q-BRI

Authentage Catalogus 2024 Authentage Katalogus 2024 Authentage Catalogue 2024 Authentage Katalog 2024 Authentage Verlichting Authentage Lighting Authentage éclairage Authentage Beleuchtung
Authentage Webshop Authentage Verlichting Authentage Armaturen Authentage Winkels Authentage Verkooppunten Authentage Verdelers Authentage Verdeelpunten Authentage België Authentage Nederland Authentage Vente en Ligne Authentage Boutique Vente en Ligne Authentage Luminaires Authentage éclairage
Authentage Revendeurs Authentage Points de vente Authentage Magasins Authentage Boutiques Authentage Points de distribution Authentage France Authentage Lighting Authentage Retailers Authentage Dealers Authentage Distributors Authentage Points of sale Authentage Resellers Authentage England
Authentage Beleuchtung Authent Beleuchtung Authentage Leuchten Authentage Händler Authentage Shops Authentage Verkaufsstellen Authentage Vertriebspartner Authentage Deutschland Authentage E-shop Authentage Geschäfte Authentage Vertriebsstellen

www.Bcosy.be - Waarschoot - België - Belgique - Belgium - Belgien tel 0032 (0) 9 378 24 30 Mail: info@bcosy.be

ALB

SUSPENSION

IP 20

Lamps not included, consult light source guide for our advice.



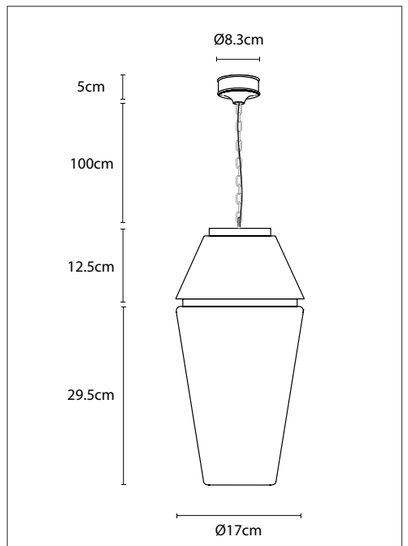

CODE	TYPE	FINISH	WATT	VOLT	FITTING
ALB001S40	Alb suspension	Alabaster & Bronze	15	230	E27

Contact us for:

Customization & connectivity

Authentage Catalogus 2024 Authentage Katalogus 2024 Authentage Catalogue 2024 Authentage Katalog 2024 Authentage Verlichting Authentage Lighting Authentage éclairage Authentage Beleuchtung
Authentage Webshop Authentage Verlichting Authentage Armaturen Authentage Winkels Authentage Verkooppunten Authentage Verdelers Authentage Verdeelpunten Authentage België Authentage Nederland Authentage Vente en Ligne Authentage Boutique Vente en Ligne Authentage Luminaires Authentage éclairage
Authentage Revendeurs Authentage Points de vente Authentage Magasins Authentage Boutiques Authentage Points de distribution Authentage France Authentage Lighting Authentage Retailers Authentage Dealers Authentage Distributors Authentage Points of sale Authentage Resellers Authentage England
Authentage Beleuchtung Authent Beleuchtung Authentage Leuchten Authentage Händler Authentage Shops Authentage Verkaufsstellen Authentage Vertriebspartner Authentage Deutschland Authentage E-shop Authentage Geschäfte Authentage Vertriebsstellen

www.Bcosy.be - Waarschoot - België - Belgique - Belgium - Belgien tel 0032 (0) 9 378 24 30 Mail: info@bcosy.be

ELIGNE

SUSPENSION

IP 20 | DI

Dim-to-warm option available on request, see p493 accessories.
Standard suspension with chain, steel cables on request.

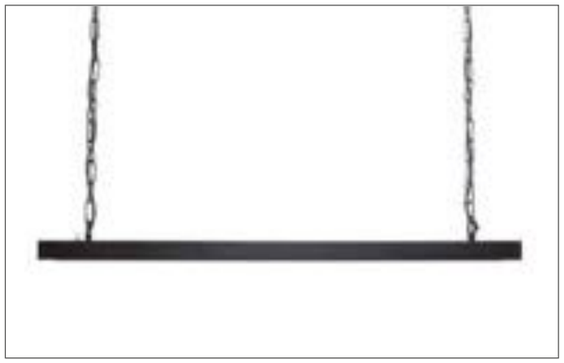

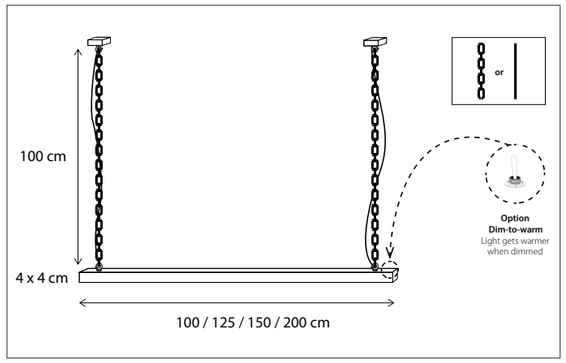

CODE	TYPE	FINISH	WATT	VOLT	FITTING
ELP002100	Eligne profile 100 cm	Bronze	25	230	-
ELP002125	Eligne profile 125 cm	Bronze	32	230	-
ELP002150	Eligne profile 150 cm	Bronze	39	230	-
ELP002200	Eligne profile 200 cm	Bronze	56	230	-
ELP102100	Eligne profile 100 cm	Brushed nickel	25	230	-
ELP102125	Eligne profile 125 cm	Brushed nickel	32	230	-
ELP102150	Eligne profile 150 cm	Brushed nickel	39	230	-
ELP102200	Eligne profile 200 cm	Brushed nickel	56	230	-
ELP202100	Eligne profile 100 cm	Chrome	25	230	-
ELP202125	Eligne profile 125 cm	Chrome	32	230	-
ELP202150	Eligne profile 150 cm	Chrome	39	230	-
ELP202200	Eligne profile 200 cm	Chrome	56	230	-

Contact us for:
Customization & connectivity

ELEBASE ON CHAIN

SUSPENSION

IP 20 | DALI

Lamps not included, consult light source guide for our advice.

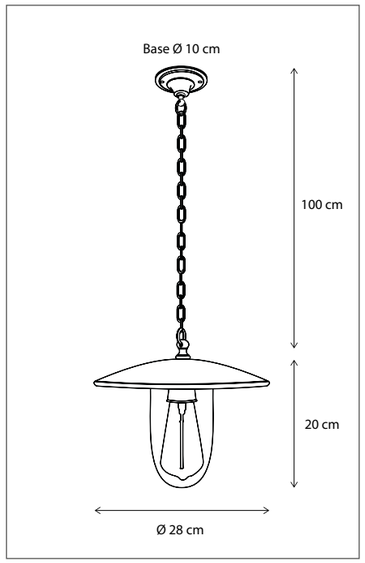



CODE	TYPE	FINISH	WATT	VOLT	FITTING
ELB001200	Elébase on chain	Bronze	15	230	E27
ELB101200	Elébase on chain	Brushed nickel	15	230	E27
ELB201200	Elébase on chain	Chrome	15	230	E27

Contact us for:
Customization & connectivity

Authentage Catalogus 2024 Authentage Katalogus 2024 Authentage Catalogue 2024 Authentage Katalog 2024 Authentage Verlichting Authentage Lighting Authentage éclairage Authentage Beleuchtung
Authentage Webshop Authentage Verlichting Authentage Armaturen Authentage Winkels Authentage Verkooppunten Authentage Verdelers Authentage Verdeelpunten Authentage België Authentage Nederland Authentage Vente en Ligne Authentage Boutique Vente en Ligne Authentage Luminaires Authentage éclairage
Authentage Revendeurs Authentage Points de vente Authentage Magasins Authentage Boutiques Authentage Points de distribution Authentage France Authentage Lighting Authentage Retailers Authentage Dealers Authentage Distributors Authentage Points of sale Authentage Resellers Authentage England
Authentage Beleuchtung Authent Beleuchtung Authentage Leuchten Authentage Händler Authentage Shops Authentage Verkaufsstellen Authentage Vertriebspartner Authentage Deutschland Authentage E-shop Authentage Geschäfte Authentage Vertriebsstellen

www.Bcosy.be - Waarschoot - België - Belgique - Belgium - Belgien tel 0032 (0) 9 378 24 30 Mail: info@bcosy.be

ELEBASE ON TUBE

SUSPENSION

IP 20

Lamps not included, consult light source guide for our advice.



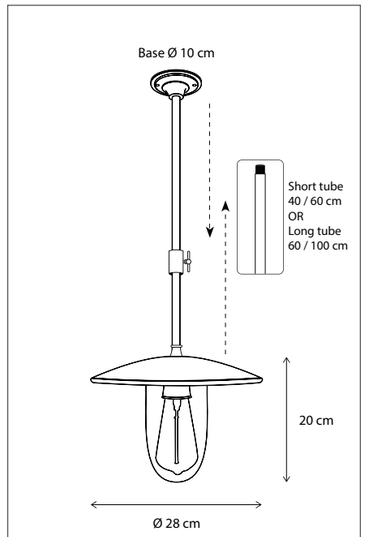

CODE	TYPE	FINISH	WATT	VOLT	FITTING
ELB001206	Elébase on short tube 40 cm - 60 cm	Bronze	15	230	E27
ELB001210	Elébase on long tube 60 cm - 100 cm	Bronze	15	230	E27
ELB101206	Elébase on short tube 40 cm - 60 cm	Brushed nickel	15	230	E27
ELB101210	Elébase on long tube 60 cm - 100 cm	Brushed nickel	15	230	E27
ELB201206	Elébase on short tube 40 cm - 60 cm	Chrome	15	230	E27
ELB201210	Elébase on long tube 60 cm - 100 cm	Chrome	15	230	E27

Contact us for:

Customization & connectivity

ELEBASE ON PROFILE

SUSPENSION

IP 20

Lamps not included, consult light source guide for our advice.

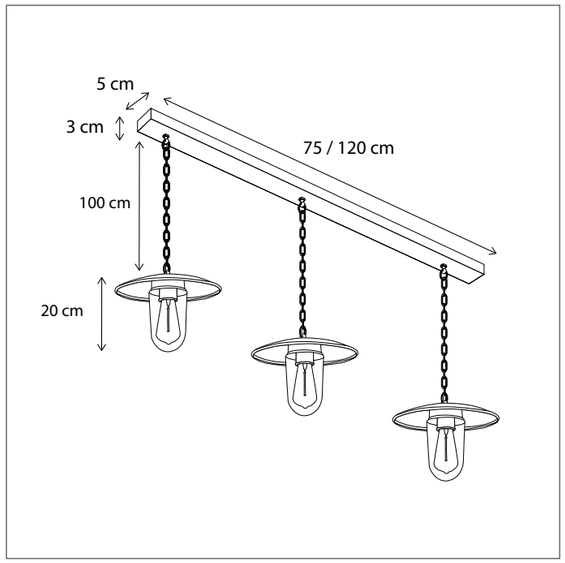



CODE	TYPE	FINISH	WATT	VOLT	FITTING
ELB002201	Elébase on profile with chain 75 cm - 2L	Bronze	2 x 15	230	E27
ELB003202	Elébase on profile with chain 120 cm - 3L	Bronze	3 x 15	230	E27
ELB102201	Elébase on profile with chain 75 cm - 2L	Brushed nickel	2 x 15	230	E27
ELB103202	Elébase on profile with chain 120 cm - 3L	Brushed nickel	3 x 15	230	E27
ELB202201	Elébase on profile with chain 75 cm - 2L	Chrome	2 x 15	230	E27
ELB203202	Elébase on profile with chain 120 cm - 3L	Chrome	3 x 15	230	E27

Contact us for:

Customization & connectivity

INDOOR I SUSPENSION I ELEBASE

Authentage Catalogus 2024 Authentage Katalogus 2024 Authentage Catalogue 2024 Authentage Katalog 2024 Authentage Verlichting Authentage Lighting Authentage éclairage Authentage Beleuchtung
Authentage Webshop Authentage Verlichting Authentage Armaturen Authentage Winkels Authentage Verkooppunten Authentage Verdelers Authentage Verdeelpunten Authentage België Authentage Nederland Authentage Vente en Ligne Authentage Boutique Vente en Ligne Authentage Luminaires Authentage éclairage
Authentage Revendeurs Authentage Points de vente Authentage Magasins Authentage Boutiques Authentage Points de distribution Authentage France Authentage Lighting Authentage Retailers Authentage Dealers Authentage Distributors Authentage Points of sale Authentage Resellers Authentage England
Authentage Beleuchtung Authent Beleuchtung Authentage Leuchten Authentage Händler Authentage Shops Authentage Verkaufsstellen Authentage Vertriebspartner Authentage Deutschland Authentage E-shop Authentage Geschäfte Authentage Vertriebsstellen

www.Bcosy.be - Waarschoot - België - Belgique - Belgium - Belgien tel 0032 (0) 9 378 24 30 Mail: info@bcosy.be

ELEBASE
MULTIPLE ON TUBE

SUSPENSION

IP 20

Lamps not included, consult light source guide for our advice.



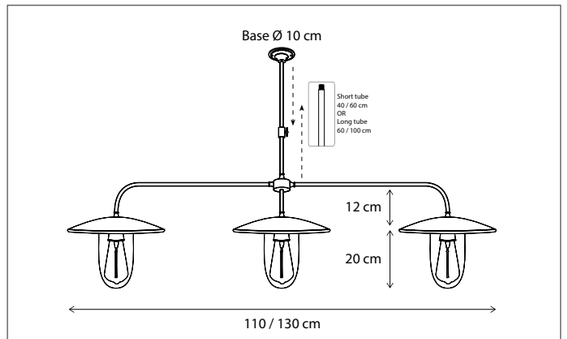

CODE	TYPE	FINISH	WATT	VOLT	FITTING
ELB002U06	Elébase double with short tube 40 - 60 cm	Bronze	2 x 15	230	E27
ELB002U10	Elébase double with long tube 60 cm - 100 cm	Bronze	2 x 15	230	E27
ELB003W06	Elébase triple with short tube 40 cm - 60 cm	Bronze	3 x 15	230	E27
ELB003W10	Elébase triple with long tube 60 cm - 100 cm	Bronze	3 x 15	230	E27
ELB102U06	Elébase double with short tube 40 - 60 cm	Brushed nickel	2 x 15	230	E27
ELB102U10	Elébase double with long tube 60 cm - 100 cm	Brushed nickel	2 x 15	230	E27
ELB103W06	Elébase triple with short tube 40 cm - 60 cm	Brushed nickel	3 x 15	230	E27
ELB103W10	Elébase triple with long tube 60 cm - 100 cm	Brushed nickel	3 x 15	230	E27
ELB202U06	Elébase double with short tube 40 - 60 cm	Chrome	2 x 15	230	E27
ELB202U10	Elébase double with long tube 60 cm - 100 cm	Chrome	2 x 15	230	E27
ELB203W06	Elébase triple with short tube 40 cm - 60 cm	Chrome	3 x 15	230	E27
ELB203W10	Elébase triple with long tube 60 cm - 100 cm	Chrome	3 x 15	230	E27

Contact us for:

Customization & connectivity

ELEGANCE ON CHAIN

SUSPENSION

IP 20

Lamps not included, consult light source guide for our advice.

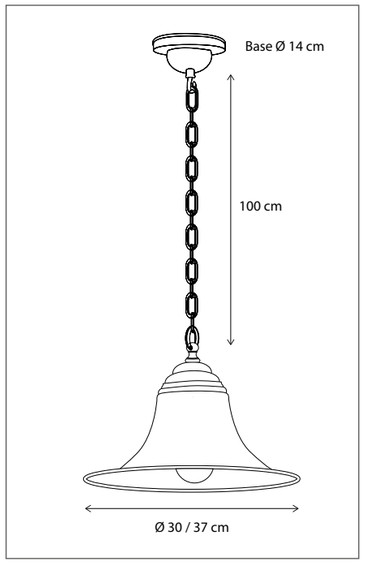



CODE	TYPE	FINISH	WATT	VOLT	FITTING
ELE001201	Elégance on chain petite 1L	Bronze	15	230	E27
ELE001202	Elégance on chain grande 1L	Bronze	15	230	E27
ELE101201	Elégance on chain petite 1L	Brushed nickel	15	230	E27
ELE101202	Elégance on chain grande 1L	Brushed nickel	15	230	E27
ELE201201	Elégance on chain petite 1L	Chrome	15	230	E27
ELE201202	Elégance on chain grande 1L	Chrome	15	230	E27

Contact us for:

Customization & connectivity

Authentage Catalogus 2024 Authentage Katalogus 2024 Authentage Catalogue 2024 Authentage Katalog 2024 Authentage Verlichting Authentage Lighting Authentage éclairage Authentage Beleuchtung
Authentage Webshop Authentage Verlichting Authentage Armaturen Authentage Winkels Authentage Verkooppunten Authentage Verdelers Authentage Verdeelpunten Authentage België Authentage Nederland Authentage Vente en Ligne Authentage Boutique Vente en Ligne Authentage Luminaires Authentage éclairage
Authentage Revendeurs Authentage Points de vente Authentage Magasins Authentage Boutiques Authentage Points de distribution Authentage France Authentage Lighting Authentage Retailers Authentage Dealers Authentage Distributors Authentage Points of sale Authentage Resellers Authentage England
Authentage Beleuchtung Authent Beleuchtung Authentage Leuchten Authentage Händler Authentage Shops Authentage Verkaufsstellen Authentage Vertriebspartner Authentage Deutschland Authentage E-shop Authentage Geschäfte Authentage Vertriebsstellen

www.Bcosy.be - Waarschoot - België - Belgique - Belgium - Belgien tel 0032 (0) 9 378 24 30 Mail: info@bcosy.be

ELEGANCE MULTIPLE

SUSPENSION



Lamps not included, consult light source guide for our advice.



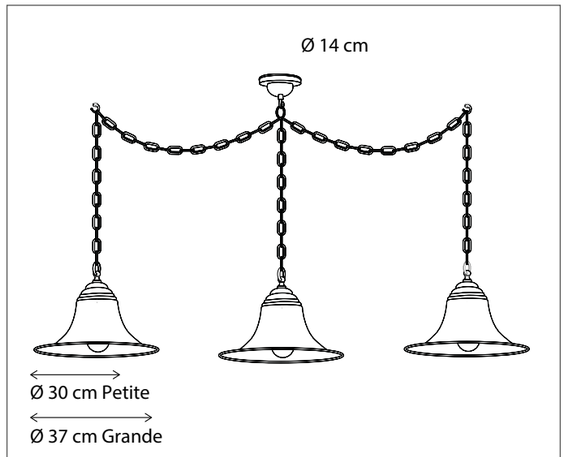

CODE	TYPE	FINISH	WATT	VOLT	FITTING
ELE002P14	Elégance on chain petite 2L	Bronze	2 x 15	230	E27
ELE002G15	Elégance on chain grande 2L	Bronze	2 x 15	230	E27
ELE003P16	Elégance on chain petite 3L	Bronze	3 x 15	230	E27
ELE003G17	Elégance on chain grande 3L	Bronze	3 x 15	230	E27
ELE102P14	Elégance on chain petite 2L	Brushed nickel	2 x 15	230	E27
ELE102G15	Elégance on chain grande 2L	Brushed nickel	2 x 15	230	E27
ELE103P16	Elégance on chain petite 3L	Brushed nickel	3 x 15	230	E27
ELE103G17	Elégance on chain grande 3L	Brushed nickel	3 x 15	230	E27
ELE202P14	Elégance on chain petite 2L	Chrome	2 x 15	230	E27
ELE202G15	Elégance on chain grande 2L	Chrome	2 x 15	230	E27
ELE203P16	Elégance on chain petite 3L	Chrome	3 x 15	230	E27
ELE203G17	Elégance on chain grande 3L	Chrome	3 x 15	230	E27

Contact us for:

Customization & connectivity

ELEGANCE ON PROFILE

SUSPENSION

Lamps not included, consult light source guide for our advice.

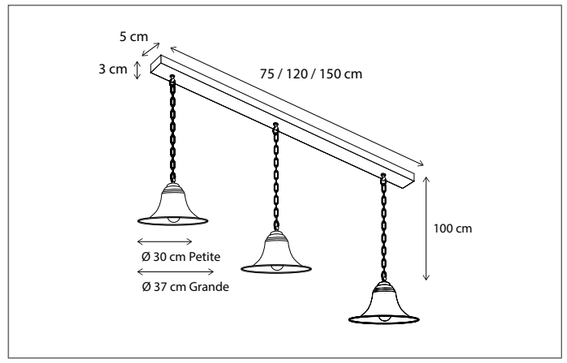



CODE	TYPE	FINISH	WATT	VOLT	FITTING
ELE002201	Elégance petite on profile 75 cm -2L	Bronze	2 x 15	230	E27
ELE002202	Elégance grande on profile 75 cm - 2L	Bronze	2 x 15	230	E27
ELE003201	Elégance petite on profile 120 cm -3L	Bronze	3 x 15	230	E27
ELE003202	Elégance grande on profile 150 cm - 3L	Bronze	3 x 15	230	E27
ELE102201	Elégance petite on profile 75 cm -2L	Brushed nickel	2 x 15	230	E27
ELE102202	Elégance grande on profile 75 cm - 2L	Brushed nickel	2 x 15	230	E27
ELE103201	Elégance petite on profile 120 cm -3L	Brushed nickel	3 x 15	230	E27
ELE103202	Elégance grande on profile 150 cm - 3L	Brushed nickel	3 x 15	230	E27
ELE202201	Elégance petite on profile 75 cm -2L	Chrome	2 x 15	230	E27
ELE202202	Elégance grande on profile 75 cm - 2L	Chrome	2 x 15	230	E27
ELE203201	Elégance petite on profile 120 cm -3L	Chrome	3 x 15	230	E27
ELE203202	Elégance grande on profile 150 cm - 3L	Chrome	3 x 15	230	E27

Contact us for:

Customization & connectivity

INDOOR I SUSPENSION I ELEGANCE

Authentage Catalogus 2024 Authentage Katalogus 2024 Authentage Catalogue 2024 Authentage Katalog 2024 Authentage Verlichting Authentage Lighting Authentage éclairage Authentage Beleuchtung
Authentage Webshop Authentage Verlichting Authentage Armaturen Authentage Winkels Authentage Verkooppunten Authentage Verdelers Authentage Verdeelpunten Authentage België Authentage Nederland Authentage Vente en Ligne Authentage Boutique Vente en Ligne Authentage Luminaires Authentage éclairage
Authentage Revendeurs Authentage Points de vente Authentage Magasins Authentage Boutiques Authentage Points de distribution Authentage France Authentage Lighting Authentage Retailers Authentage Dealers Authentage Distributors Authentage Points of sale Authentage Resellers Authentage England
Authentage Beleuchtung Authent Beleuchtung Authentage Leuchten Authentage Händler Authentage Shops Authentage Verkaufsstellen Authentage Vertriebspartner Authentage Deutschland Authentage E-shop Authentage Geschäfte Authentage Vertriebsstellen

www.Bcosy.be - Waarschoot - België - Belgique - Belgium - Belgien tel 0032 (0) 9 378 24 30 Mail: info@bcosy.be

TUBELUM ON ROUND BASE

SUSPENSION

The light source is easy to move up and down, enabling you to change the light effect.
Inside is polished brass to create a warm glow.
Suspension is possible with chain or fabric cable.

Lamps not included, consult light source guide for our advice.



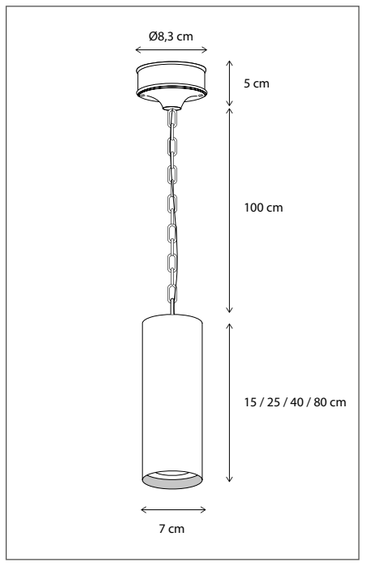

CODE	TYPE	FINISH	WATT	VOLT	FITTING
TBL001G15	Tubelum on round base 15 cm	Bronze	8	230	GU10
TBL001G25	Tubelum on round base 25 cm	Bronze	8	230	GU10
TBL001G40	Tubelum on round base 40 cm	Bronze	8	230	GU10
TBL001G80	Tubelum on round base 80 cm	Bronze	8	230	GU10

Contact us for:
Customization & connectivity

TUBELUM TUBE BASE

SUSPENSION

The light source is easy to move up and down, enabling you to change the light effect.
Inside is polished brass to create a warm glow.
Suspension is standard with fabric cable.

Lamps not included, consult light source guide for our advice

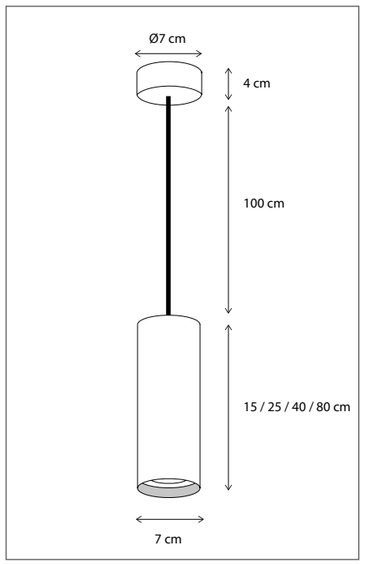



CODE	TYPE	FINISH	WATT	VOLT	FITTING
TBL001Y15	Tubelum on tube base 15 cm	Bronze	8	230	GU10
TBL001Y25	Tubelum on tube base 25 cm	Bronze	8	230	GU10
TBL001Y40	Tubelum on tube base 40 cm	Bronze	8	230	GU10
TBL001Y80	Tubelum on tube base 80 cm	Bronze	8	230	GU10

Contact us for:
Customization & connectivity

INDOOR I SUSPENSION I TUBELUM

Authentage Catalogus 2024 Authentage Katalogus 2024 Authentage Catalogue 2024 Authentage Katalog 2024 Authentage Verlichting Authentage Lighting Authentage éclairage Authentage Beleuchtung
Authentage Webshop Authentage Verlichting Authentage Armaturen Authentage Winkels Authentage Verkooppunten Authentage Verdelers Authentage Verdeelpunten Authentage België Authentage Nederland Authentage Vente en Ligne Authentage Boutique Vente en Ligne Authentage Luminaires Authentage éclairage
Authentage Revendeurs Authentage Points de vente Authentage Magasins Authentage Boutiques Authentage Points de distribution Authentage France Authentage Lighting Authentage Retailers Authentage Dealers Authentage Distributors Authentage Points of sale Authentage Resellers Authentage England
Authentage Beleuchtung Authent Beleuchtung Authentage Leuchten Authentage Händler Authentage Shops Authentage Verkaufsstellen Authentage Vertriebspartner Authentage Deutschland Authentage E-shop Authentage Geschäfte Authentage Vertriebsstellen

www.Bcosy.be - Waarschoot - België - Belgique - Belgium - Belgien tel 0032 (0) 9 378 24 30 Mail: info@bcosy.be

TUBELUM ON SQUARE BASE

SUSPENSION

The light source is easy to move up and down, enabling you to change the light effect.
Inside is polished brass to create a warm glow.
Suspension is standard with fabric cable.

Lamps not included, consult light source guide for our advice.

CODE	TYPE	FINISH	WATT	VOLT	FITTING
TBL001V15	Tubelum on square base 15 cm	Bronze	8	230	GU10
TBL001V25	Tubelum on square base 25 cm	Bronze	8	230	GU10
TBL001V40	Tubelum on square base 40 cm	Bronze	8	230	GU10
TBL001V80	Tubelum on square base 80 cm	Bronze	8	230	GU10

Contact us for:
Customization & connectivity

TUBELUM ON PROFILE

SUSPENSION

The light source is easy to move up and down, enabling you to change the light effect.
Inside is polished brass to create a warm glow.
Suspension is standard with fabric cable.

Lamps not included, consult light source guide for our advice

CODE	TYPE	FINISH	WATT	VOLT	FITTING
TBL002B15	Tubelum on profile 75 cm - 2L - 15 cm	Bronze	2 x 8	230	GU10
TBL002B25	Tubelum on profile 75 cm - 2L - 25 cm	Bronze	2 x 8	230	GU10
TBL002B40	Tubelum on profile 75 cm - 2L - 40 cm	Bronze	2 x 8	230	GU10
TBL002B80	Tubelum on profile 75 cm - 2L - 80 cm	Bronze	2 x 8	230	GU10
TBL003B15	Tubelum on profile 120 cm - 3L -15 cm	Bronze	3 x 8	230	GU10
TBL003B25	Tubelum on profile 120 cm - 3L - 25 cm	Bronze	3 x 8	230	GU10
TBL003B40	Tubelum on profile 120 cm - 3L - 40 cm	Bronze	3 x 8	230	GU10
TBL003B80	Tubelum on profile 120 cm - 3L - 80 cm	Bronze	3 x 8	230	GU10

See next page for more models.

Contact us for:
Customization & connectivity

INDOOR I SUSPENSION I TUBELUM

Authentage Catalogus 2024 Authentage Katalogus 2024 Authentage Catalogue 2024 Authentage Katalog 2024 Authentage Verlichting Authentage Lighting Authentage éclairage Authentage Beleuchtung
Authentage Webshop Authentage Verlichting Authentage Armaturen Authentage Winkels Authentage Verkooppunten Authentage Verdelers Authentage Verdeelpunten Authentage België Authentage Nederland Authentage Vente en Ligne Authentage Boutique Vente en Ligne Authentage Luminaires Authentage éclairage
Authentage Revendeurs Authentage Points de vente Authentage Magasins Authentage Boutiques Authentage Points de distribution Authentage France Authentage Lighting Authentage Retailers Authentage Dealers Authentage Distributors Authentage Points of sale Authentage Resellers Authentage England
Authentage Beleuchtung Authent Beleuchtung Authentage Leuchten Authentage Händler Authentage Shops Authentage Verkaufsstellen Authentage Vertriebspartner Authentage Deutschland Authentage E-shop Authentage Geschäfte Authentage Vertriebsstellen

www.Bcosy.be - Waarschoot - België - Belgique - Belgium - Belgien tel 0032 (0) 9 378 24 30 Mail: info@bcosy.be

TUBELUM ON PROFILE

SUSPENSION

CODE	TYPE	FINISH	WATT	VOLT	FITTING
TBL004B15	Tubelum on profile 150 cm - 4L - 15 cm	Bronze	4 x 8	230	GU10
TBL004B25	Tubelum on profile 150 cm - 4L - 25 cm	Bronze	4 x 8	230	GU10
TBL004B40	Tubelum on profile 150 cm - 4L - 40 cm	Bronze	4 x 8	230	GU10
TBL004B80	Tubelum on profile 150 cm - 4L - 80 cm	Bronze	4 x 8	230	GU10
TBL005B15	Tubelum on profile 200 cm - 5L - 15 cm	Bronze	5 x 8	230	GU10
TBL005B25	Tubelum on profile 200 cm - 5L - 25 cm	Bronze	5 x 8	230	GU10
TBL005B40	Tubelum on profile 200 cm - 5L - 40 cm	Bronze	5 x 8	230	GU10
TBL005B80	Tubelum on profile 200 cm - 5L - 80 cm	Bronze	5 x 8	230	GU10



Contact us for:

Customization & connectivity

TISSELUM

SUSPENSION

Integrated LED.
The light reflects on polished mesh, resulting in a warm glow.

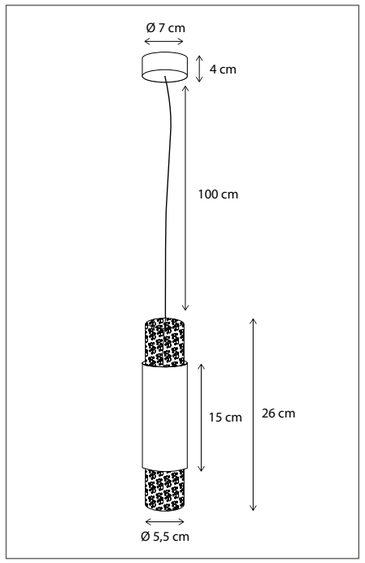



CODE	TYPE	FINISH	WATT	VOLT	FITTING
TIS001G15	Tisselum suspension 1L	Bronze	2,4	230	-

Contact us for:

Customization & connectivity

Authentage Catalogus 2024 Authentage Katalogus 2024 Authentage Catalogue 2024 Authentage Katalog 2024 Authentage Verlichting Authentage Lighting Authentage éclairage Authentage Beleuchtung
Authentage Webshop Authentage Verlichting Authentage Armaturen Authentage Winkels Authentage Verkooppunten Authentage Verdelers Authentage Verdeelpunten Authentage België Authentage Nederland Authentage Vente en Ligne Authentage Boutique Vente en Ligne Authentage Luminaires Authentage éclairage
Authentage Revendeurs Authentage Points de vente Authentage Magasins Authentage Boutiques Authentage Points de distribution Authentage France Authentage Lighting Authentage Retailers Authentage Dealers Authentage Distributors Authentage Points of sale Authentage Resellers Authentage England
Authentage Beleuchtung Authent Beleuchtung Authentage Leuchten Authentage Händler Authentage Shops Authentage Verkaufsstellen Authentage Vertriebspartner Authentage Deutschland Authentage E-shop Authentage Geschäfte Authentage Vertriebsstellen

www.Bcosy.be - Waarschoot - België - Belgique - Belgium - Belgien tel 0032 (0) 9 378 24 30 Mail: info@bcosy.be

FILOU
MOUNTED BASE

SUSPENSION

IP 20

Lamps not included, consult light source guide for our advice.



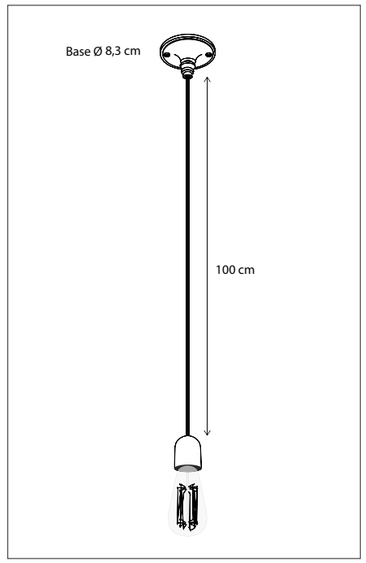

CODE	TYPE	FINISH	WATT	VOLT	FITTING
FIL001CF8	Filou on round base with cable	Bronze	15	230	E27
FIL001TF8	Filou on round base with tube	Bronze	15	230	E27
FIL101CF8	Filou on round base with cable	Brushed nickel	15	230	E27
FIL101TF8	Filou on round base with tube	Brushed nickel	15	230	E27
FIL201CF8	Filou on round base with cable	Chrome	15	230	E27
FIL201TF8	Filou on round base with tube	Chrome	15	230	E27

Contact us for:

Customization & connectivity

FILOU
ON SQUARE BASE

SUSPENSION

IP 20

Lamps not included, consult light source guide for our advice.

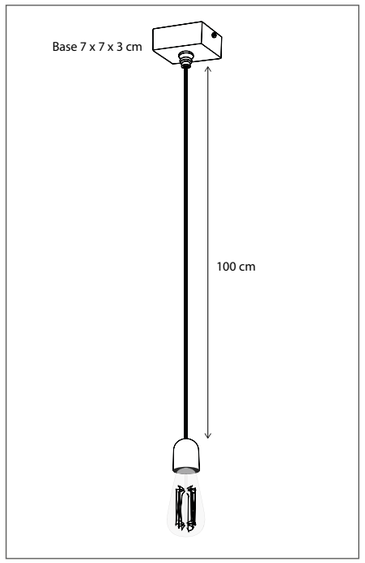



CODE	TYPE	FINISH	WATT	VOLT	FITTING
FIL001CV7	Filou on square base with cable	Bronze	15	230	E27
FIL001TV7	Filou on square base with tube	Bronze	15	230	E27
FIL101CV7	Filou on square base with cable	Brushed nickel	15	230	E27
FIL101TV7	Filou on square base with tube	Brushed nickel	15	230	E27
FIL201CV7	Filou on square base with cable	Chrome	15	230	E27
FIL201TV7	Filou on square base with tube	Chrome	15	230	E27

Contact us for:

Customization & connectivity

Authentage Catalogus 2024 Authentage Katalogus 2024 Authentage Catalogue 2024 Authentage Katalog 2024 Authentage Verlichting Authentage Lighting Authentage éclairage Authentage Beleuchtung
Authentage Webshop Authentage Verlichting Authentage Armaturen Authentage Winkels Authentage Verkooppunten Authentage Verdelers Authentage Verdeelpunten Authentage België Authentage Nederland Authentage Vente en Ligne Authentage Boutique Vente en Ligne Authentage Luminaires Authentage éclairage
Authentage Revendeurs Authentage Points de vente Authentage Magasins Authentage Boutiques Authentage Points de distribution Authentage France Authentage Lighting Authentage Retailers Authentage Dealers Authentage Distributors Authentage Points of sale Authentage Resellers Authentage England
Authentage Beleuchtung Authent Beleuchtung Authentage Leuchten Authentage Händler Authentage Shops Authentage Verkaufsstellen Authentage Vertriebspartner Authentage Deutschland Authentage E-shop Authentage Geschäfte Authentage Vertriebsstellen

www.Bcosy.be - Waarschoot - België - Belgique - Belgium - Belgien tel 0032 (0) 9 378 24 30 Mail: info@bcosy.be

MOEMOE
MOUNTED BASE

SUSPENSION

Glass not included, see p 475 for different options.
Lamps not included, consult light source guide for our advice.



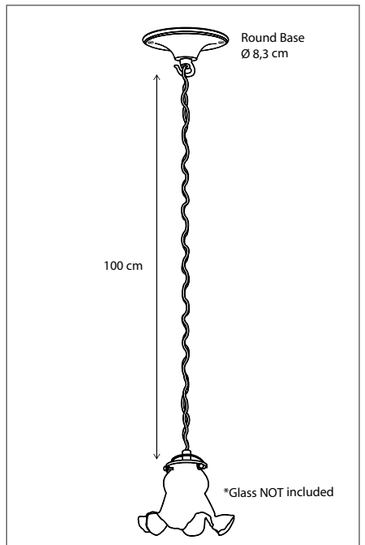

CODE	TYPE	FINISH	WATT	VOLT	FITTING
MOE001G83	Moemoe mounted base 1L	Bronze	6	230	BA15d
MOE002G83	Moemoe mounted base 2L	Bronze	2 x 6	230	BA15d
MOE003G83	Moemoe mounted base 3L	Bronze	3 x 6	230	BA15d
MOE101G83	Moemoe mounted base 1L	Brushed nickel	6	230	BA15d
MOE102G83	Moemoe mounted base 2L	Brushed nickel	2 x 6	230	BA15d
MOE103G83	Moemoe mounted base 3L	Brushed nickel	3 x 6	230	BA15d
MOE201G83	Moemoe mounted base 1L	Chrome	6	230	BA15d
MOE202G83	Moemoe mounted base 2L	Chrome	2 x 6	230	BA15d
MOE203G83	Moemoe mounted base 3L	Chrome	3 x 6	230	BA15d

Contact us for:
Customization & connectivity

MOEMOE
ON SQUARE BASE

SUSPENSION

Glass not included, see p 475 for different options.
Lamps not included, consult light source guide for our advice.

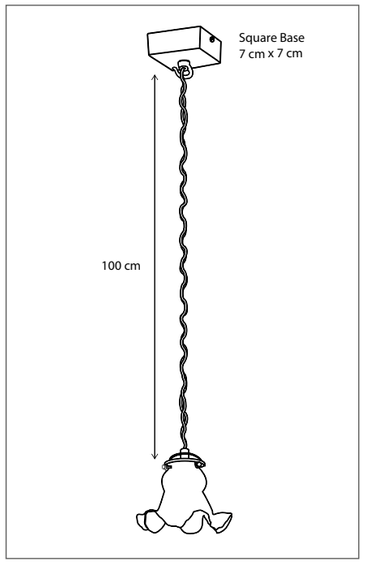



CODE	TYPE	FINISH	WATT	VOLT	FITTING
MOE001S70	Moemoe on square base 1L	Bronze	6	230	BA15d
MOE101S70	Moemoe on square base 1L	Brushed nickel	6	230	BA15d
MOE201S70	Moemoe on square base 1L	Chrome	6	230	BA15d

Contact us for:
Customization & connectivity

INDOOR I SUSPENSION I MOEMOE

Authentage Catalogus 2024 Authentage Katalogus 2024 Authentage Catalogue 2024 Authentage Katalog 2024 Authentage Verlichting Authentage Lighting Authentage éclairage Authentage Beleuchtung
Authentage Webshop Authentage Verlichting Authentage Armaturen Authentage Winkels Authentage Verkooppunten Authentage Verdelers Authentage Verdeelpunten Authentage België Authentage Nederland Authentage Vente en Ligne Authentage Boutique Vente en Ligne Authentage Luminaires Authentage éclairage
Authentage Revendeurs Authentage Points de vente Authentage Magasins Authentage Boutiques Authentage Points de distribution Authentage France Authentage Lighting Authentage Retailers Authentage Dealers Authentage Distributors Authentage Points of sale Authentage Resellers Authentage England
Authentage Beleuchtung Authent Beleuchtung Authentage Leuchten Authentage Händler Authentage Shops Authentage Verkaufsstellen Authentage Vertriebspartner Authentage Deutschland Authentage E-shop Authentage Geschäfte Authentage Vertriebsstellen

www.Bcosy.be - Waarschoot - België - Belgique - Belgium - Belgien tel 0032 (0) 9 378 24 30 Mail: info@bcosy.be

MOEMOE ON PROFILE

SUSPENSION

IP 20

Glass not included, see p 475 for different options.
Lamps not included, consult light source guide for our advice.



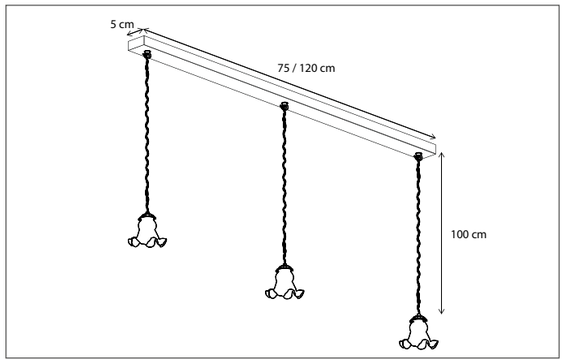

CODE	TYPE	FINISH	WATT	VOLT	FITTING
MOE002P07	Moemoe on profile 75 cm - 2L	Bronze	2 X 6	230	BA15d
MOE003P12	Moemoe on profile 120 cm - 3L	Bronze	3 X 6	230	BA15d
MOE102P07	Moemoe on profile 75 cm - 2L	Brushed nickel	2 X 6	230	BA15d
MOE103P12	Moemoe on profile 120 cm - 3L	Brushed nickel	3 X 6	230	BA15d
MOE202P07	Moemoe on profile 75 cm - 2L	Chrome	2 X 6	230	BA15d
MOE203P12	Moemoe on profile 120 cm - 3L	Chrome	3 X 6	230	BA15d

Contact us for:
Customization & connectivity

BOMPA ON TUBE

SUSPENSION

IP 20

Glass not included, see p 475 for different options.
Lamps not included, consult light source guide for our advice.

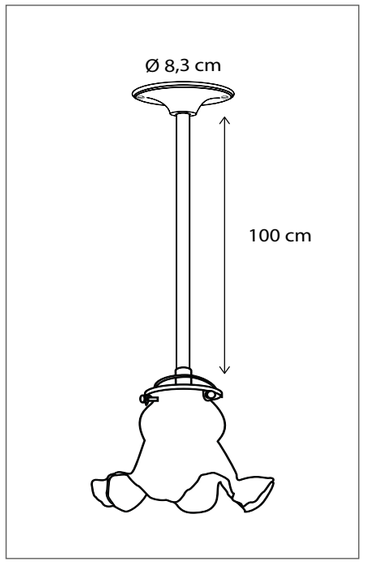

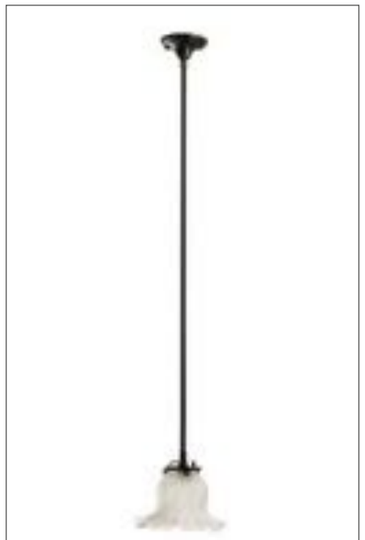

CODE	TYPE	FINISH	WATT	VOLT	FITTING
BOM001S20	Bompa on tube arm	Bronze	6	230	BA15d
BOM101S20	Bompa on tube arm	Brushed nickel	6	230	BA15d
BOM201S20	Bompa on tube arm	Chrome	6	230	BA15d

Contact us for:
Customization & connectivity

Authentage Catalogus 2024 Authentage Katalogus 2024 Authentage Catalogue 2024 Authentage Katalog 2024 Authentage Verlichting Authentage Lighting Authentage éclairage Authentage Beleuchtung
Authentage Webshop Authentage Verlichting Authentage Armaturen Authentage Winkels Authentage Verkooppunten Authentage Verdelers Authentage Verdeelpunten Authentage België Authentage Nederland Authentage Vente en Ligne Authentage Boutique Vente en Ligne Authentage Luminaires Authentage éclairage
Authentage Revendeurs Authentage Points de vente Authentage Magasins Authentage Boutiques Authentage Points de distribution Authentage France Authentage Lighting Authentage Retailers Authentage Dealers Authentage Distributors Authentage Points of sale Authentage Resellers Authentage England
Authentage Beleuchtung Authent Beleuchtung Authentage Leuchten Authentage Händler Authentage Shops Authentage Verkaufsstellen Authentage Vertriebspartner Authentage Deutschland Authentage E-shop Authentage Geschäfte Authentage Vertriebsstellen

www.Bcosy.be - Waarschoot - België - Belgique - Belgium - Belgien tel 0032 (0) 9 378 24 30 Mail: info@bcosy.be

VITRINE 66

VITRINE PETITE 72

Q-BRI 75

FILOU 77

BAINWAT 78

BARRON 79

ECLIPS 84

TUBELUM 86

Ceiling

INDOOR



CATALOGUE I INDOOR I CEILING

Authentage Catalogus 2024 Authentage Katalogus 2024 Authentage Catalogue 2024 Authentage Katalog 2024 Authentage Verlichting Authentage Lighting Authentage éclairage Authentage Beleuchtung
Authentage Webshop Authentage Verlichting Authentage Armaturen Authentage Winkels Authentage Verkooppunten Authentage Verdelers Authentage Verdeelpunten Authentage België Authentage Nederland Authentage Vente en Ligne Authentage Boutique Vente en Ligne Authentage Luminaires Authentage éclairage
Authentage Revendeurs Authentage Points de vente Authentage Magasins Authentage Boutiques Authentage Points de distribution Authentage France Authentage Lighting Authentage Retailers Authentage Dealers Authentage Distributors Authentage Points of sale Authentage Resellers Authentage England
Authentage Beleuchtung Authent Beleuchtung Authentage Leuchten Authentage Händler Authentage Shops Authentage Verkaufsstellen Authentage Vertriebspartner Authentage Deutschland Authentage E-shop Authentage Geschäfte Authentage Vertriebsstellen

www.Bcosy.be - Waarschoot - België - Belgique - Belgium - Belgien tel 0032 (0) 9 378 24 30 Mail: info@bcosy.be

VITRINE LONG

CEILING

IP 20

Lamps not included, consult light source guide for our advice.



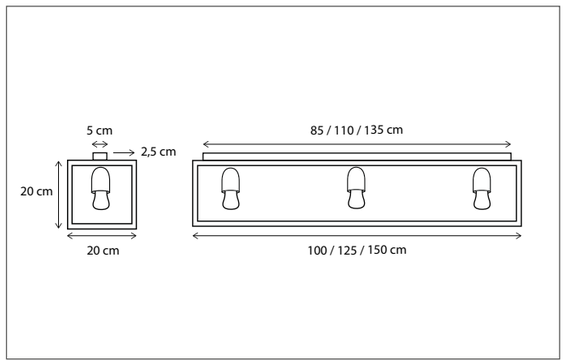

CODE	TYPE	FINISH	WATT	VOLT	FITTING
VIT003204	Vitrine plafonnier long 100 cm - 3L	Bronze	3 x 15	230	E27
VIT004205	Vitrine plafonnier long 125 cm - 4L	Bronze	4 x 15	230	E27
VIT005206	Vitrine plafonnier long 150 cm - 5L	Bronze	5 x 15	230	E27
VIT103204	Vitrine plafonnier long 100 cm - 3L	Brushed nickel	3 x 15	230	E27
VIT104205	Vitrine plafonnier long 125 cm - 4L	Brushed nickel	4 x 15	230	E27
VIT105206	Vitrine plafonnier long 150 cm - 5L	Brushed nickel	5 x 15	230	E27
VIT203204	Vitrine plafonnier long 100 cm - 3L	Chrome	3 x 15	230	E27
VIT204205	Vitrine plafonnier long 125 cm - 4L	Chrome	4 x 15	230	E27
VIT205206	Vitrine plafonnier long 150 cm - 5L	Chrome	5 x 15	230	E27

Contact us for:
Customization & connectivity

VITRINE SQUARE

CEILING

IP 40

Lamps not included, consult light source guide for our advice.

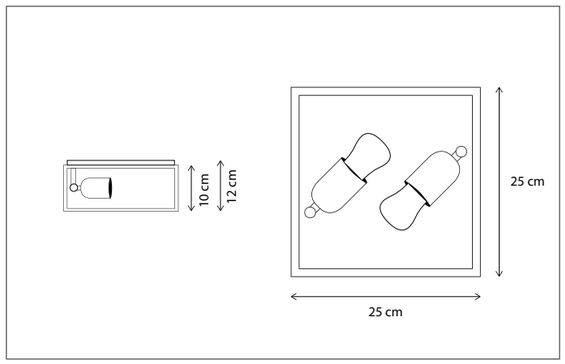



CODE	TYPE	FINISH	WATT	VOLT	FITTING
VIT001201	Vitrine plafonnier square 1L	Bronze	15	230	E27
VIT002201	Vitrine plafonnier square 2L	Bronze	2 x 15	230	E27
VIT101201	Vitrine plafonnier square 1L	Brushed nickel	15	230	E27
VIT102201	Vitrine plafonnier square 2L	Brushed nickel	2 x 15	230	E27
VIT201201	Vitrine plafonnier square 1L	Chrome	15	230	E27
VIT202201	Vitrine plafonnier square 2L	Chrome	2 x 15	230	E27

Contact us for:
Customization & connectivity

INDOOR I CEILING I VITRINE

Authentage Catalogus 2024 Authentage Katalogus 2024 Authentage Catalogue 2024 Authentage Katalog 2024 Authentage Verlichting Authentage Lighting Authentage éclairage Authentage Beleuchtung
Authentage Webshop Authentage Verlichting Authentage Armaturen Authentage Winkels Authentage Verkooppunten Authentage Verdelers Authentage Verdeelpunten Authentage België Authentage Nederland Authentage Vente en Ligne Authentage Boutique Vente en Ligne Authentage Luminaires Authentage éclairage
Authentage Revendeurs Authentage Points de vente Authentage Magasins Authentage Boutiques Authentage Points de distribution Authentage France Authentage Lighting Authentage Retailers Authentage Dealers Authentage Distributors Authentage Points of sale Authentage Resellers Authentage England
Authentage Beleuchtung Authent Beleuchtung Authentage Leuchten Authentage Händler Authentage Shops Authentage Verkaufsstellen Authentage Vertriebspartner Authentage Deutschland Authentage E-shop Authentage Geschäfte Authentage Vertriebsstellen

www.Bcosy.be - Waarschoot - België - Belgique - Belgium - Belgien tel 0032 (0) 9 378 24 30 Mail: info@bcosy.be

VITRINE LANTERN

CEILING

IP 20

Lamps not included, consult light source guide for our advice.



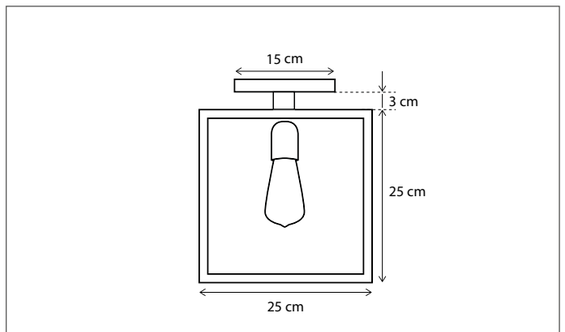

CODE	TYPE	FINISH	WATT	VOLT	FITTING
VIT001225	Vitrine plafonnier lantern	Bronze	15	230	E27
VIT101225	Vitrine plafonnier lantern	Brushed nickel	15	230	E27
VIT201225	Vitrine plafonnier lantern	Chrome	15	230	E27

Contact us for:

Customization & connectivity

VITRINE FLEURE LONG

CEILING

IP 40

Lamps not included, consult light source guide for our advice.

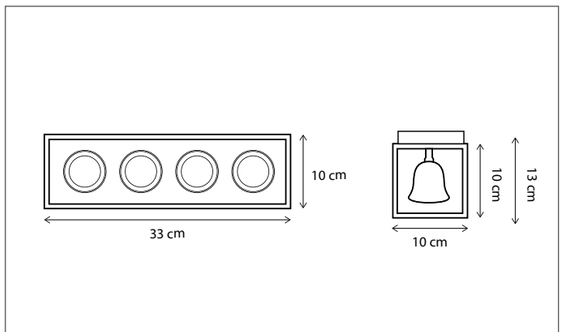



CODE	TYPE	FINISH	WATT	VOLT	FITTING
VIT0L4208	Vitrine plafonnier fleure long 4L	Bronze	4 x 5	230	G4
VIT1L4208	Vitrine plafonnier fleure long 4L	Brushed nickel	4 x 5	230	G4
VIT2L4208	Vitrine plafonnier fleure long 4L	Chrome	4 x 5	230	G4

Contact us for:

Customization & connectivity

INDOOR I CEILING I VITRINE

Authentage Catalogus 2024 Authentage Katalogus 2024 Authentage Catalogue 2024 Authentage Katalog 2024 Authentage Verlichting Authentage Lighting Authentage éclairage Authentage Beleuchtung
Authentage Webshop Authentage Verlichting Authentage Armaturen Authentage Winkels Authentage Verkooppunten Authentage Verdelers Authentage Verdeelpunten Authentage België Authentage Nederland Authentage Vente en Ligne Authentage Boutique Vente en Ligne Authentage Luminaires Authentage éclairage
Authentage Revendeurs Authentage Points de vente Authentage Magasins Authentage Boutiques Authentage Points de distribution Authentage France Authentage Lighting Authentage Retailers Authentage Dealers Authentage Distributors Authentage Points of sale Authentage Resellers Authentage England
Authentage Beleuchtung Authent Beleuchtung Authentage Leuchten Authentage Händler Authentage Shops Authentage Verkaufsstellen Authentage Vertriebspartner Authentage Deutschland Authentage E-shop Authentage Geschäfte Authentage Vertriebsstellen

www.Bcosy.be - Waarschoot - België - Belgique - Belgium - Belgien tel 0032 (0) 9 378 24 30 Mail: info@bcosy.be

VITRINE FLEURE SQUARE

CEILING

Lamps not included, consult light source guide for our advice.



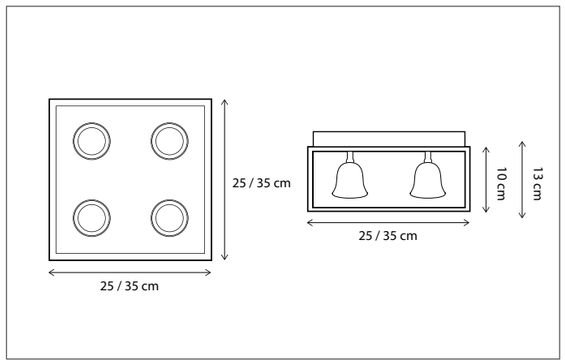

CODE	TYPE	FINISH	WATT	VOLT	FITTING
VIT0L4209	Vitrine plafonnier fleure square 4L	Bronze	4 x 5	230	G4
VIT0L9210	Vitrine plafonnier fleure square 9L	Bronze	9 x 5	230	G4
VIT1L4209	Vitrine plafonnier fleure square 4L	Brushed nickel	4 x 5	230	G4
VIT1L9210	Vitrine plafonnier fleure square 9L	Brushed nickel	9 x 5	230	G4
VIT2L4209	Vitrine plafonnier fleure square 4L	Chrome	4 x 5	230	G4
VIT2L9210	Vitrine plafonnier fleure square 9L	Chrome	9 x 5	230	G4

Contact us for:
Customization & connectivity

VITRINE CENTONZE

CEILING

Lamps not included, consult light source guide for our advice.

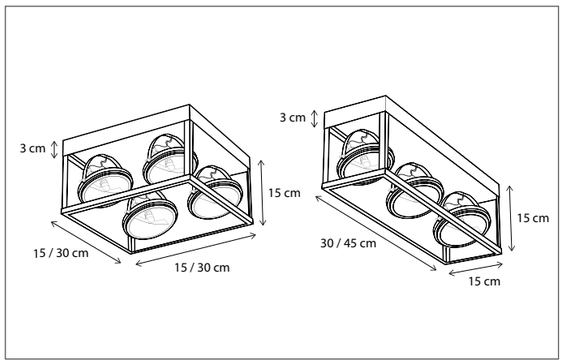



CODE	TYPE	FINISH	WATT	VOLT	FITTING
VIT001H15	Vitrine centonze plafonnier 1L - 15 x 15 cm	Bronze	12	230	G53
VIT002H15	Vitrine centonze plafonnier 2L - 30 x 15 cm	Bronze	2 x 12	230	G53
VIT003H15	Vitrine centonze plafonnier 3L - 45 x 15 cm	Bronze	3 x 12	230	G53
VIT004H15	Vitrine centonze plafonnier square 4L - 30 x 30 cm	Bronze	4 x 12	230	G53
VIT101H15	Vitrine centonze plafonnier 1L - 15 x 15 cm	Brushed nickel	12	230	G53
VIT102H15	Vitrine centonze plafonnier 2L - 30 x 15 cm	Brushed nickel	2 x 12	230	G53
VIT103H15	Vitrine centonze plafonnier 3L - 45 x 15 cm	Brushed nickel	3 x 12	230	G53
VIT104H15	Vitrine centonze plafonnier square 4L - 30 x 30 cm	Brushed nickel	4 x 12	230	G53
VIT201H15	Vitrine centonze plafonnier 1L - 15 x 15 cm	Chrome	12	230	G53
VIT202H15	Vitrine centonze plafonnier 2L - 30 x 15 cm	Chrome	2 x 12	230	G53
VIT203H15	Vitrine centonze plafonnier 3L - 45 x 15 cm	Chrome	3 x 12	230	G53
VIT204H15	Vitrine centonze plafonnier square 4L - 30 x 30 cm	Chrome	4 x 12	230	G53

Contact us for:
Customization & connectivity

INDOOR I CEILING I VITRINE

Authentage Catalogus 2024 Authentage Katalogus 2024 Authentage Catalogue 2024 Authentage Katalog 2024 Authentage Verlichting Authentage Lighting Authentage éclairage Authentage Beleuchtung
Authentage Webshop Authentage Verlichting Authentage Armaturen Authentage Winkels Authentage Verkooppunten Authentage Verdelers Authentage Verdeelpunten Authentage België Authentage Nederland Authentage Vente en Ligne Authentage Boutique Vente en Ligne Authentage Luminaires Authentage éclairage
Authentage Revendeurs Authentage Points de vente Authentage Magasins Authentage Boutiques Authentage Points de distribution Authentage France Authentage Lighting Authentage Retailers Authentage Dealers Authentage Distributors Authentage Points of sale Authentage Resellers Authentage England
Authentage Beleuchtung Authent Beleuchtung Authentage Leuchten Authentage Händler Authentage Shops Authentage Verkaufsstellen Authentage Vertriebspartner Authentage Deutschland Authentage E-shop Authentage Geschäfte Authentage Vertriebsstellen

www.Bcosy.be - Waarschoot - België - Belgique - Belgium - Belgien tel 0032 (0) 9 378 24 30 Mail: info@bcosy.be

VITRINE
PETITE STRETCH

CEILING

IP 40

Lamps not included, consult light source guide for our advice.



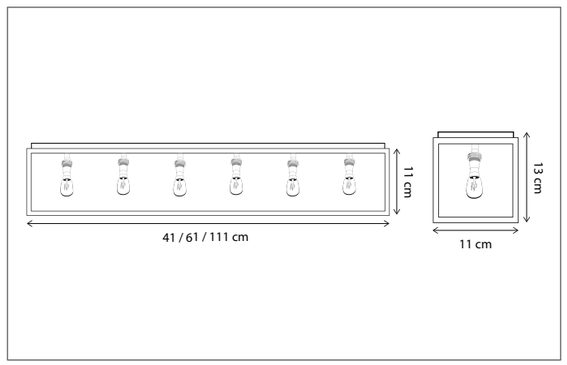

CODE	TYPE	FINISH	WATT	VOLT	FITTING
VIP004041	Vitrine petite stretch 41 cm - 4L	Bronze	4 x 6	230	BA15d
VIP006061	Vitrine petite stretch 61 cm - 6L	Bronze	6 x 6	230	BA15d
VIP011111	Vitrine petite stretch 111 cm - 11L	Bronze	11 x 6	230	BA15d
VIP104041	Vitrine petite stretch 41 cm - 4L	Brushed nickel	4 x 6	230	BA15d
VIP106061	Vitrine petite stretch 61 cm - 6L	Brushed nickel	6 x 6	230	BA15d
VIP111111	Vitrine petite stretch 111 cm - 11L	Brushed nickel	11 x 6	230	BA15d
VIP204041	Vitrine petite stretch 41 cm - 4L	Chrome	4 x 6	230	BA15d
VIP206061	Vitrine petite stretch 61 cm - 6L	Chrome	6 x 6	230	BA15d
VIP211111	Vitrine petite stretch 111 cm - 11L	Chrome	11 x 6	230	BA15d

Contact us for:
Customization & connectivity

VITRINE
PETITE LINESTRA

CEILING

IP 40

Lamps not included, consult light source guide for our advice.

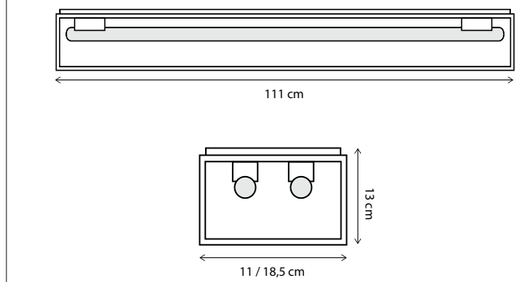



CODE	TYPE	FINISH	WATT	VOLT	FITTING
VIS001202	Vitrine petite linestra long 111 cm - 1L	Bronze	20	230	S14S
VIS002202	Vitrine petite linestra long 111 cm - 2L	Bronze	2 x 20	230	S14S
VIS101202	Vitrine petite linestra long 111 cm - 1L	Brushed nickel	20	230	S14S
VIS102202	Vitrine petite linestra long 111 cm - 2L	Brushed nickel	2 x 20	230	S14S
VIS201202	Vitrine petite linestra long 111 cm - 1L	Chrome	20	230	S14S
VIS202202	Vitrine petite linestra long 111 cm - 2L	Chrome	2 x 20	230	S14S

Contact us for:
Customization & connectivity

INDOOR I CEILING I VITRINE

Authentage Catalogus 2024 Authentage Katalogus 2024 Authentage Catalogue 2024 Authentage Katalog 2024 Authentage Verlichting Authentage Lighting Authentage éclairage Authentage Beleuchtung
Authentage Webshop Authentage Verlichting Authentage Armaturen Authentage Winkels Authentage Verkooppunten Authentage Verdelers Authentage Verdeelpunten Authentage België Authentage Nederland Authentage Vente en Ligne Authentage Boutique Vente en Ligne Authentage Luminaires Authentage éclairage
Authentage Revendeurs Authentage Points de vente Authentage Magasins Authentage Boutiques Authentage Points de distribution Authentage France Authentage Lighting Authentage Retailers Authentage Dealers Authentage Distributors Authentage Points of sale Authentage Resellers Authentage England
Authentage Beleuchtung Authent Beleuchtung Authentage Leuchten Authentage Händler Authentage Shops Authentage Verkaufsstellen Authentage Vertriebspartner Authentage Deutschland Authentage E-shop Authentage Geschäfte Authentage Vertriebsstellen

www.Bcosy.be - Waarschoot - België - Belgique - Belgium - Belgien tel 0032 (0) 9 378 24 30 Mail: info@bcosy.be

VITRINE PETITE

CEILING

IP 40

Lamps not included, consult light source guide for our advice.



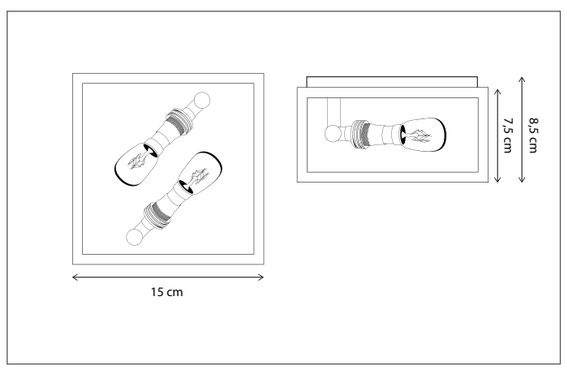

CODE	TYPE	FINISH	WATT	VOLT	FITTING
VIP002201	Vitrine petite plafonnier 2L	Bronze	2 x 6	230	BA15d
VIP102201	Vitrine petite plafonnier 2L	Brushed nickel	2 x 6	230	BA15d
VIP202201	Vitrine petite plafonnier 2L	Chrome	2 x 6	230	BA15d

Contact us for:

Customization & connectivity

Q-BRI CENTONZE

CEILING

IP 20 DI

2 circuits that can be switched on/off seperately, enabling 3 light effects:

1. Indirect illumination via an integrated LED strip
2. Direct (functional) light created by centonze spots (Lamps not included, consult light source guide for our advice)
3. Combination of above

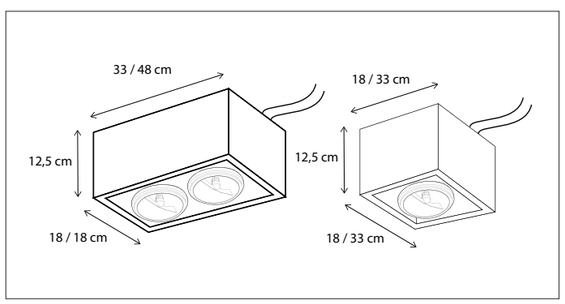



CODE	TYPE	FINISH	WATT	VOLT	FITTING
QCE0L1U18	Q-Bri centonze build up 1L - 18 x 18 cm	Bronze	15 + 6	230	G53
QCE0L2U33	Q-Bri centonze build up 2L - 33 x 18 cm	Bronze	2 x 15 + 12	230	G53
QCE0L3U48	Q-Bri centonze build up 3L - 48 x 18 cm	Bronze	3 x 15 + 15	230	G53
QCE0L4U33	Q-Bri centonze build up 4L - 33 x 33 cm	Bronze	4 x 15 + 18	230	G53
QCE1L1U18	Q-Bri centonze build up 1L - 18 x 18 cm	Brushed nickel	15 + 6	230	G53
QCE1L2U33	Q-Bri centonze build up 2L - 33 x 18 cm	Brushed nickel	2 x 15 + 12	230	G53
QCE1L3U48	Q-Bri centonze build up 3L - 48 x 18 cm	Brushed nickel	3 x 15 + 15	230	G53
QCE1L4U33	Q-Bri centonze build up 4L - 33 x 33 cm	Brushed nickel	4 x 15 + 18	230	G53
QCE2L1U18	Q-Bri centonze build up 1L - 18 x 18 cm	Chrome	15 + 6	230	G53
QCE2L2U33	Q-Bri centonze build up 2L - 33 x 18 cm	Chrome	2 x 15 + 12	230	G53
QCE2L3U48	Q-Bri centonze build up 3L - 48 x 18 cm	Chrome	3 x 15 + 15	230	G53
QCE2L4U33	Q-Bri centonze build up 4L - 33 x 33 cm	Chrome	4 x 15 + 18	230	G53

Contact us for:

Customization & connectivity

Authentage Catalogus 2024 Authentage Katalogus 2024 Authentage Catalogue 2024 Authentage Katalog 2024 Authentage Verlichting Authentage Lighting Authentage éclairage Authentage Beleuchtung
Authentage Webshop Authentage Verlichting Authentage Armaturen Authentage Winkels Authentage Verkooppunten Authentage Verdelers Authentage Verdeelpunten Authentage België Authentage Nederland Authentage Vente en Ligne Authentage Boutique Vente en Ligne Authentage Luminaires Authentage éclairage
Authentage Revendeurs Authentage Points de vente Authentage Magasins Authentage Boutiques Authentage Points de distribution Authentage France Authentage Lighting Authentage Retailers Authentage Dealers Authentage Distributors Authentage Points of sale Authentage Resellers Authentage England
Authentage Beleuchtung Authent Beleuchtung Authentage Leuchten Authentage Händler Authentage Shops Authentage Verkaufsstellen Authentage Vertriebspartner Authentage Deutschland Authentage E-shop Authentage Geschäfte Authentage Vertriebsstellen

www.Bcosy.be - Waarschoot - België - Belgique - Belgium - Belgien tel 0032 (0) 9 378 24 30 Mail: info@bcosy.be

Q-BRI COMETE

CEILING



On request, these fixtures are also available with a GU10 fitting.

2 circuits that can be switched on/off seperately, enabling 3 light effects:

1. Indirect illumination via an integrated LED strip
2. Direct (functional) light created by comète spots (Lamps not included, consult light source guide for our advice)
3. Combination of above



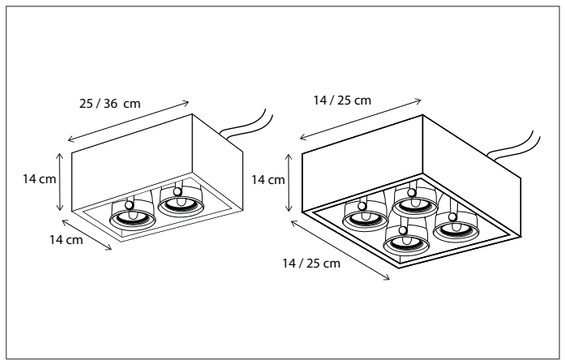

FILOU

CEILING



Lamps not included, consult light source guide for our advice.

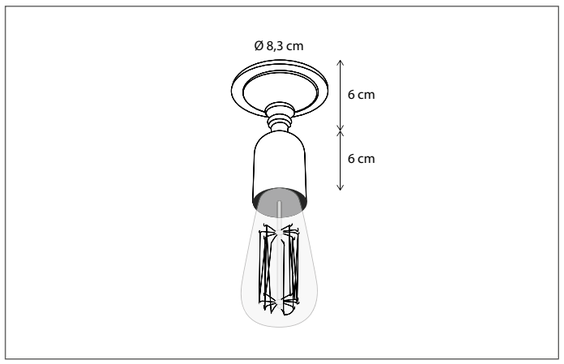



CODE	TYPE	FINISH	WATT	VOLT	FITTING
QCO0L1U14	Q-Bri comète build up 1L - 14 x 14 cm	Bronze	8 + 6	230	BA15d
QCO0L2U25	Q-Bri comète build up 2L - 25 x 14 cm	Bronze	2 x 8 + 9	230	BA15d
QCO0L3U36	Q-Bri comète build up 3L - 36 x 14 cm	Bronze	3 x 8 + 12	230	BA15d
QCO0L4U25	Q-Bri comète build up 4L - 25 x 25 cm	Bronze	4 x 8 + 12	230	BA15d
QCO1L1U14	Q-Bri comète build up 1L - 14 x 14 cm	Brushed nickel	8 + 6	230	BA15d
QCO1L2U25	Q-Bri comète build up 2L - 25 x 14 cm	Brushed nickel	2 x 8 + 9	230	BA15d
QCO1L3U36	Q-Bri comète build up 3L - 36 x 14 cm	Brushed nickel	3 x 8 + 12	230	BA15d
QCO1L4U25	Q-Bri comète build up 4L - 25 x 25 cm	Brushed nickel	4 x 8 + 12	230	BA15d
QCO2L1U14	Q-Bri comète build up 1L - 14 x 14 cm	Chrome	8 + 6	230	BA15d
QCO2L2U25	Q-Bri comète build up 2L - 25 x 14 cm	Chrome	2 x 8 + 9	230	BA15d
QCO2L3U36	Q-Bri comète build up 3L - 36 x 14 cm	Chrome	3 x 8 + 12	230	BA15d
QCO2L4U25	Q-Bri comète build up 4L - 25 x 25 cm	Chrome	4 x 8 + 12	230	BA15d

CODE	TYPE	FINISH	WATT	VOLT	FITTING
FIL001P83	Filou ceiling	Bronze	15	230	E27
FIL101P83	Filou ceiling	Brushed nickel	15	230	E27
FIL201P83	Filou ceiling	Chrome	15	230	E27

SCAN & DISCOVER
THE MULTIPLE LIGHTING SCENES

Contact us for:
Customization & connectivity

Contact us for:
Customization & connectivity

Authentage Catalogus 2024 Authentage Katalogus 2024 Authentage Catalogue 2024 Authentage Katalog 2024 Authentage Verlichting Authentage Lighting Authentage éclairage Authentage Beleuchtung
Authentage Webshop Authentage Verlichting Authentage Armaturen Authentage Winkels Authentage Verkooppunten Authentage Verdelers Authentage Verdeelpunten Authentage België Authentage Nederland Authentage Vente en Ligne Authentage Boutique Vente en Ligne Authentage Luminaires Authentage éclairage
Authentage Revendeurs Authentage Points de vente Authentage Magasins Authentage Boutiques Authentage Points de distribution Authentage France Authentage Lighting Authentage Retailers Authentage Dealers Authentage Distributors Authentage Points of sale Authentage Resellers Authentage England
Authentage Beleuchtung Authent Beleuchtung Authentage Leuchten Authentage Händler Authentage Shops Authentage Verkaufsstellen Authentage Vertriebspartner Authentage Deutschland Authentage E-shop Authentage Geschäfte Authentage Vertriebsstellen

www.Bcosy.be - Waarschoot - België - Belgique - Belgium - Belgien tel 0032 (0) 9 378 24 30 Mail: info@bcosy.be

BAINWAT

CEILING

IP 40

Glass included.
Lamps not included, consult light source guide for our advice.



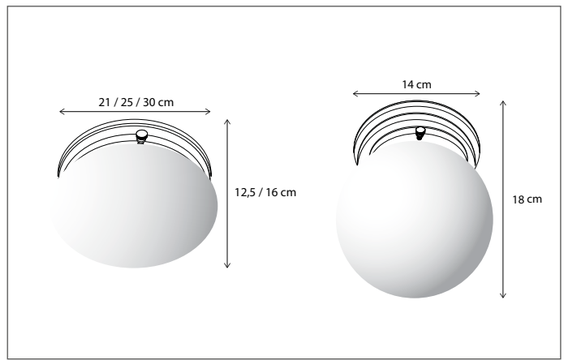

CODE	TYPE	FINISH	WATT	VOLT	FITTING
BNW001P14	Bainwat ceiling 14 cm	Bronze	15	230	E27
BNW001P21	Bainwat ceiling 21 cm	Bronze	15	230	E27
BNW001P25	Bainwat ceiling 25 cm	Bronze	15	230	E27
BNW001P30	Bainwat ceiling 30 cm	Bronze	2 x 15	230	E27
BNW101P14	Bainwat ceiling 14 cm	Brushed nickel	15	230	E27
BNW101P21	Bainwat ceiling 21 cm	Brushed nickel	15	230	E27
BNW101P25	Bainwat ceiling 25 cm	Brushed nickel	15	230	E27
BNW101P30	Bainwat ceiling 30 cm	Brushed nickel	2 x 15	230	E27
BNW201P14	Bainwat ceiling 14 cm	Chrome	15	230	E27
BNW201P21	Bainwat ceiling 21 cm	Chrome	15	230	E27
BNW201P25	Bainwat ceiling 25 cm	Chrome	15	230	E27
BNW201P30	Bainwat ceiling 30 cm	Chrome	2 x 15	230	E27

Contact us for:
Customization & connectivity

BARRON ON PROFILE

CEILING

IP 20

Customise your product, choose the length of the profile and number of fittings.
Lamps not included, consult light source guide for our advice.

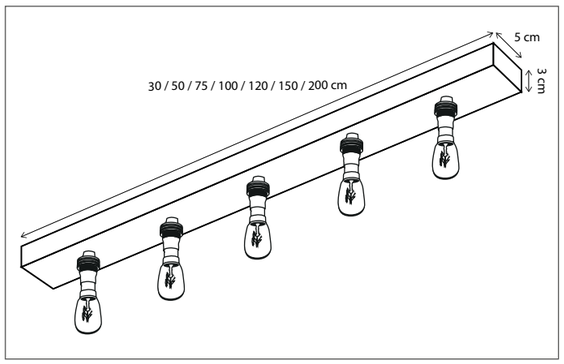



CODE	TYPE	FINISH	WATT	VOLT	FITTING
BAR003B03	Barron on profile 30 cm - 3L	Bronze	3 x 6	230	BA15d
BAR005B05	Barron on profile 50 cm - 5L	Bronze	5 x 6	230	BA15d
BAR007B07	Barron on profile 75 cm - 7L	Bronze	7 x 6	230	BA15d
BAR010B10	Barron on profile 100 cm - 10L	Bronze	10 x 6	230	BA15d
BAR012B12	Barron on profile 120 cm - 12L	Bronze	12 x 6	230	BA15d
BAR015B15	Barron on profile 150 cm - 15L	Bronze	15 x 6	230	BA15d
BAR020B20	Barron on profile 200 cm - 20L	Bronze	20 x 6	230	BA15d
BAR103B03	Barron on profile 30 cm - 3L	Brushed nickel	3 x 6	230	BA15d
BAR105B05	Barron on profile 50 cm - 5L	Brushed nickel	5 x 6	230	BA15d
BAR107B07	Barron on profile 75 cm - 7L	Brushed nickel	7 x 6	230	BA15d

See next page for more models.

Contact us for:
Customization & connectivity

Authentage Catalogus 2024 Authentage Katalogus 2024 Authentage Catalogue 2024 Authentage Katalog 2024 Authentage Verlichting Authentage Lighting Authentage éclairage Authentage Beleuchtung
Authentage Webshop Authentage Verlichting Authentage Armaturen Authentage Winkels Authentage Verkooppunten Authentage Verdelers Authentage Verdeelpunten Authentage België Authentage Nederland Authentage Vente en Ligne Authentage Boutique Vente en Ligne Authentage Luminaires Authentage éclairage
Authentage Revendeurs Authentage Points de vente Authentage Magasins Authentage Boutiques Authentage Points de distribution Authentage France Authentage Lighting Authentage Retailers Authentage Dealers Authentage Distributors Authentage Points of sale Authentage Resellers Authentage England
Authentage Beleuchtung Authent Beleuchtung Authentage Leuchten Authentage Händler Authentage Shops Authentage Verkaufsstellen Authentage Vertriebspartner Authentage Deutschland Authentage E-shop Authentage Geschäfte Authentage Vertriebsstellen

www.Bcosy.be - Waarschoot - België - Belgique - Belgium - Belgien tel 0032 (0) 9 378 24 30 Mail: info@bcosy.be

BARRON ON PROFILE

CEILING

CODE	TYPE	FINISH	WATT	VOLT	FITTING
BAR110B10	Barron on profile 100 cm - 10L	Brushed nickel	10 x 6	230	BA15d
BAR112B12	Barron on profile 120 cm - 12L	Brushed nickel	12 x 6	230	BA15d
BAR115B15	Barron on profile 150 cm - 15L	Brushed nickel	15 x 6	230	BA15d
BAR120B20	Barron on profile 200 cm - 20L	Brushed nickel	20 x 6	230	BA15d
BAR203B03	Barron on profile 30 cm - 3L	Chrome	3 x 6	230	BA15d
BAR205B05	Barron on profile 50 cm - 5L	Chrome	5 x 6	230	BA15d
BAR207B07	Barron on profile 75 cm - 7L	Chrome	7 x 6	230	BA15d
BAR210B10	Barron on profile 100 cm - 10L	Chrome	10 x 6	230	BA15d
BAR212B12	Barron on profile 120 cm - 12L	Chrome	12 x 6	230	BA15d
BAR215B15	Barron on profile 150 cm - 15L	Chrome	15 x 6	230	BA15d
BAR220B20	Barron on profile 200 cm - 20L	Chrome	20 x 6	230	BA15d



BARRON ON SQUARE BASE

CEILING

Lamps not included, consult light source guide for our advice.

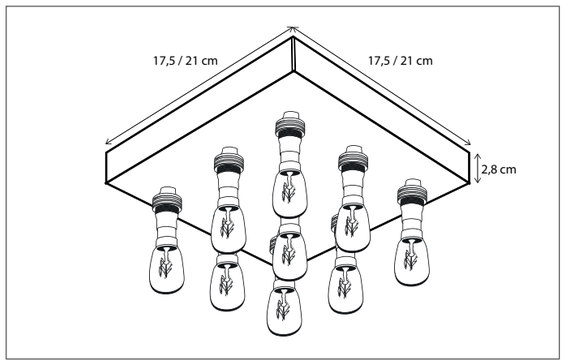



CODE	TYPE	FINISH	WATT	VOLT	FITTING
BAR009V17	Barron on square base 9L	Bronze	9 x 6	230	BA15d
BAR016V21	Barron on square base 16L	Bronze	16 x 6	230	BA15d
BAR109V17	Barron on square base 9L	Brushed nickel	9 x 6	230	BA15d
BAR116V21	Barron on square base 16L	Brushed nickel	16 x 6	230	BA15d
BAR209V17	Barron on square base 9L	Chrome	9 x 6	230	BA15d
BAR216V21	Barron on square base 16L	Chrome	16 x 6	230	BA15d

Contact us for:
Customization & connectivity

Contact us for:
Customization & connectivity

INDOOR I CEILING I BARRON

Authentage Catalogus 2024 Authentage Katalogus 2024 Authentage Catalogue 2024 Authentage Katalog 2024 Authentage Verlichting Authentage Lighting Authentage éclairage Authentage Beleuchtung
Authentage Webshop Authentage Verlichting Authentage Armaturen Authentage Winkels Authentage Verkooppunten Authentage Verdelers Authentage Verdeelpunten Authentage België Authentage Nederland Authentage Vente en Ligne Authentage Boutique Vente en Ligne Authentage Luminaires Authentage éclairage
Authentage Revendeurs Authentage Points de vente Authentage Magasins Authentage Boutiques Authentage Points de distribution Authentage France Authentage Lighting Authentage Retailers Authentage Dealers Authentage Distributors Authentage Points of sale Authentage Resellers Authentage England
Authentage Beleuchtung Authent Beleuchtung Authentage Leuchten Authentage Händler Authentage Shops Authentage Verkaufsstellen Authentage Vertriebspartner Authentage Deutschland Authentage E-shop Authentage Geschäfte Authentage Vertriebsstellen

www.Bcosy.be - Waarschoot - België - Belgique - Belgium - Belgien tel 0032 (0) 9 378 24 30 Mail: info@bcosy.be

ECLIPS ROUND

CEILING

IP 20 | DALI | DI

Indirected light effect via 2 integrated LED-strips 2700K (top and bottom).
For control/connectivity options, see p494 accessories.



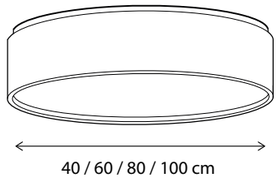

CODE	TYPE	FINISH	WATT	VOLT	FITTING
ECP05IR04	Eclips plafonnier round 40 cm	Bronze	30	230	-
ECP05IR06	Eclips plafonnier round 60 cm	Bronze	45	230	-
ECP05IR08	Eclips plafonnier round 80 cm	Bronze	60	230	-
ECP05IR10	Eclips plafonnier round 100 cm	Bronze	75	230	-

Contact us for:

Customization & connectivity

Authentage Catalogus 2024 Authentage Katalogus 2024 Authentage Catalogue 2024 Authentage Katalog 2024 Authentage Verlichting Authentage Lighting Authentage éclairage Authentage Beleuchtung
Authentage Webshop Authentage Verlichting Authentage Armaturen Authentage Winkels Authentage Verkooppunten Authentage Verdelers Authentage Verdeelpunten Authentage België Authentage Nederland Authentage Vente en Ligne Authentage Boutique Vente en Ligne Authentage Luminaires Authentage éclairage
Authentage Revendeurs Authentage Points de vente Authentage Magasins Authentage Boutiques Authentage Points de distribution Authentage France Authentage Lighting Authentage Retailers Authentage Dealers Authentage Distributors Authentage Points of sale Authentage Resellers Authentage England
Authentage Beleuchtung Authent Beleuchtung Authentage Leuchten Authentage Händler Authentage Shops Authentage Verkaufsstellen Authentage Vertriebspartner Authentage Deutschland Authentage E-shop Authentage Geschäfte Authentage Vertriebsstellen

www.Bcosy.be - Waarschoot - België - Belgique - Belgium - Belgien tel 0032 (0) 9 378 24 30 Mail: info@bcosy.be

TUBELUM

CEILING

IP 20

The light source is easy to move up and down, enabling you to change the light effect.
Inside is polished brass to create a warm glow.

Lamps not included, consult light source guide for our advice.



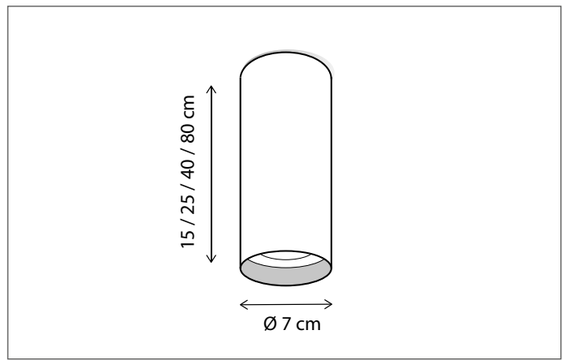

CODE	TYPE	FINISH	WATT	VOLT	FITTING
TBL001C15	Tubelum ceiling 15cm	Bronze	8	230	GU10
TBL001C25	Tubelum ceiling 25cm	Bronze	8	230	GU10
TBL001C40	Tubelum ceiling 40cm	Bronze	8	230	GU10
TBL001C80	Tubelum ceiling 80cm	Bronze	8	230	GU10

Contact us for:

Customization & connectivity



Authentage Catalogus 2024 Authentage Katalogus 2024 Authentage Catalogue 2024 Authentage Katalog 2024 Authentage Verlichting Authentage Lighting Authentage éclairage Authentage Beleuchtung
Authentage Webshop Authentage Verlichting Authentage Armaturen Authentage Winkels Authentage Verkooppunten Authentage Verdelers Authentage Verdeelpunten Authentage België Authentage Nederland Authentage Vente en Ligne Authentage Boutique Vente en Ligne Authentage Luminaires Authentage éclairage
Authentage Revendeurs Authentage Points de vente Authentage Magasins Authentage Boutiques Authentage Points de distribution Authentage France Authentage Lighting Authentage Retailers Authentage Dealers Authentage Distributors Authentage Points of sale Authentage Resellers Authentage England
Authentage Beleuchtung Authent Beleuchtung Authentage Leuchten Authentage Händler Authentage Shops Authentage Verkaufsstellen Authentage Vertriebspartner Authentage Deutschland Authentage E-shop Authentage Geschäfte Authentage Vertriebsstellen

www.Bcosy.be - Waarschoot - België - Belgique - Belgium - Belgien tel 0032 (0) 9 378 24 30 Mail: info@bcosy.be

CENTONZE 90

COUPETTE 103

LIT 105

MARRON 110

COMETE 124

POIRE 138

FLEURE 154

FLEURE TWIN 167

FISTON 178

TUBELUM 193

Spot

INDOOR



CATALOGUE I INDOOR I SPOT

Authentage Catalogus 2024 Authentage Katalogus 2024 Authentage Catalogue 2024 Authentage Katalog 2024 Authentage Verlichting Authentage Lighting Authentage éclairage Authentage Beleuchtung
Authentage Webshop Authentage Verlichting Authentage Armaturen Authentage Winkels Authentage Verkooppunten Authentage Verdelers Authentage Verdeelpunten Authentage België Authentage Nederland Authentage Vente en Ligne Authentage Boutique Vente en Ligne Authentage Luminaires Authentage éclairage
Authentage Revendeurs Authentage Points de vente Authentage Magasins Authentage Boutiques Authentage Points de distribution Authentage France Authentage Lighting Authentage Retailers Authentage Dealers Authentage Distributors Authentage Points of sale Authentage Resellers Authentage England
Authentage Beleuchtung Authent Beleuchtung Authentage Leuchten Authentage Händler Authentage Shops Authentage Verkaufsstellen Authentage Vertriebspartner Authentage Deutschland Authentage E-shop Authentage Geschäfte Authentage Vertriebsstellen

www.Bcosy.be - Waarschoot - België - Belgique - Belgium - Belgien tel 0032 (0) 9 378 24 30 Mail: info@bcosy.be

CENTONZE DISC WITH SPRINGS

SPOT

Select the correct driver, see p486 accessories.
Lamps not included, consult light source guide for our advice.



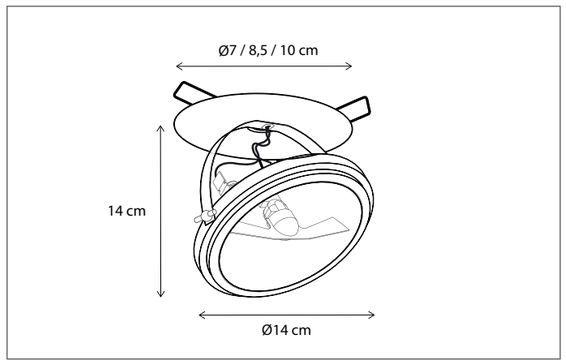

CODE	TYPE	FINISH	WATT	VOLT	FITTING
CEN0L1I70	Centonze disc with springs 7 cm	Bronze	15	12	G53
CEN0L1I85	Centonze disc with springs 8,5 cm	Bronze	15	12	G53
CEN0L1I10	Centonze disc with springs 10 cm	Bronze	15	12	G53
CEN1L1I70	Centonze disc with springs 7 cm	Brushed nickel	15	12	G53
CEN1L1I85	Centonze disc with springs 8,5 cm	Brushed nickel	15	12	G53
CEN1L1I10	Centonze disc with springs 10 cm	Brushed nickel	15	12	G53
CEN2L1I70	Centonze disc with springs 7 cm	Chrome	15	12	G53
CEN2L1I85	Centonze disc with springs 8,5 cm	Chrome	15	12	G53
CEN2L1I10	Centonze disc with springs 10 cm	Chrome	15	12	G53

SCAN & DISCOVER
OUR PATENTED KELVIN KILLER®

Contact us for:
Customization & connectivity

CENTONZE ROSAS WITH SPRINGS

SPOT

Select the correct driver, see p486 accessories.
Lamps not included, consult light source guide for our advice.

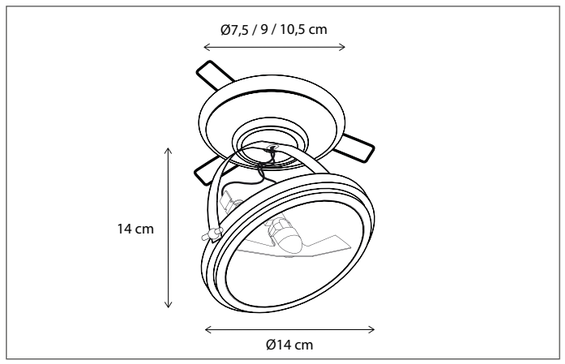



CODE	TYPE	FINISH	WATT	VOLT	FITTING
CEN0L1J75	Centonze rosas with springs 7,5 cm	Bronze	15	12	G53
CEN0L1J90	Centonze rosas with springs 9 cm	Bronze	15	12	G53
CEN0L1J10	Centonze rosas with springs 10,5 cm	Bronze	15	12	G53
CEN1L1J75	Centonze rosas with springs 7,5 cm	Brushed nickel	15	12	G53
CEN1L1J90	Centonze rosas with springs 9 cm	Brushed nickel	15	12	G53
CEN1L1J10	Centonze rosas with springs 10,5 cm	Brushed nickel	15	12	G53
CEN2L1J75	Centonze rosas with springs 7,5 cm	Chrome	15	12	G53
CEN2L1J90	Centonze rosas with springs 9 cm	Chrome	15	12	G53
CEN2L1J10	Centonze rosas with springs 10,5 cm	Chrome	15	12	G53

Contact us for:
Customization & connectivity

INDOOR I SPOT I CENTONZE

Authentage Catalogus 2024 Authentage Katalogus 2024 Authentage Catalogue 2024 Authentage Katalog 2024 Authentage Verlichting Authentage Lighting Authentage éclairage Authentage Beleuchtung
Authentage Webshop Authentage Verlichting Authentage Armaturen Authentage Winkels Authentage Verkooppunten Authentage Verdelers Authentage Verdeelpunten Authentage België Authentage Nederland Authentage Vente en Ligne Authentage Boutique Vente en Ligne Authentage Luminaires Authentage éclairage
Authentage Revendeurs Authentage Points de vente Authentage Magasins Authentage Boutiques Authentage Points de distribution Authentage France Authentage Lighting Authentage Retailers Authentage Dealers Authentage Distributors Authentage Points of sale Authentage Resellers Authentage England
Authentage Beleuchtung Authent Beleuchtung Authentage Leuchten Authentage Händler Authentage Shops Authentage Verkaufsstellen Authentage Vertriebspartner Authentage Deutschland Authentage E-shop Authentage Geschäfte Authentage Vertriebsstellen

www.Bcosy.be - Waarschoot - België - Belgique - Belgium - Belgien tel 0032 (0) 9 378 24 30 Mail: info@bcosy.be

CENTONZE MOUNTED BASE

SPOT

Select the correct driver, see p486 accessories.
Lamps not included, consult light source guide for our advice.



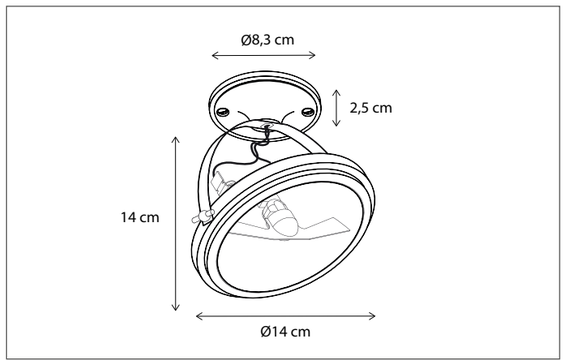

CODE	TYPE	FINISH	WATT	VOLT	FITTING
CEN0L1G83	Centonze mounted base	Bronze	15	12	G53
CEN1L1G83	Centonze mounted base	Brushed nickel	15	12	G53
CEN2L1G83	Centonze mounted base	Chrome	15	12	G53

SCAN & DISCOVER
OUR PATENTED KELVIN KILLER®

Contact us for:
Customization & connectivity

CENTONZE ON ROUND BASE

SPOT

Lamps not included, consult light source guide for our advice.

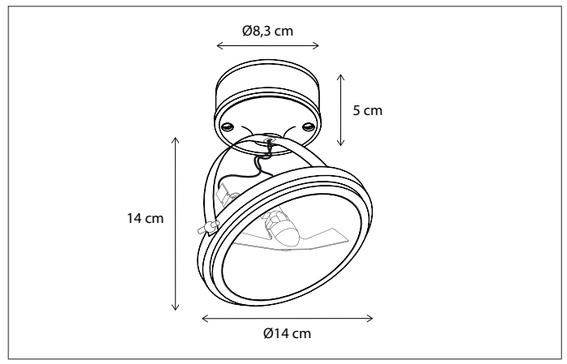



CODE	TYPE	FINISH	WATT	VOLT	FITTING
CEN0L1F83	Centonze on round base	Bronze	15	230	G53
CEN1L1F83	Centonze on round base	Brushed nickel	15	230	G53
CEN2L1F83	Centonze on round base	Chrome	15	230	G53

Contact us for:
Customization & connectivity

INDOOR I SPOT I CENTONZE

Authentage Catalogus 2024 Authentage Katalogus 2024 Authentage Catalogue 2024 Authentage Katalog 2024 Authentage Verlichting Authentage Lighting Authentage éclairage Authentage Beleuchtung
Authentage Webshop Authentage Verlichting Authentage Armaturen Authentage Winkels Authentage Verkooppunten Authentage Verdelers Authentage Verdeelpunten Authentage België Authentage Nederland Authentage Vente en Ligne Authentage Boutique Vente en Ligne Authentage Luminaires Authentage éclairage
Authentage Revendeurs Authentage Points de vente Authentage Magasins Authentage Boutiques Authentage Points de distribution Authentage France Authentage Lighting Authentage Retailers Authentage Dealers Authentage Distributors Authentage Points of sale Authentage Resellers Authentage England
Authentage Beleuchtung Authent Beleuchtung Authentage Leuchten Authentage Händler Authentage Shops Authentage Verkaufsstellen Authentage Vertriebspartner Authentage Deutschland Authentage E-shop Authentage Geschäfte Authentage Vertriebsstellen

www.Bcosy.be - Waarschoot - België - Belgique - Belgium - Belgien tel 0032 (0) 9 378 24 30 Mail: info@bcosy.be

CENTONZE
ON ROUNDED PROFILE

SPOT

Lamps not included, consult light source guide for our advice.



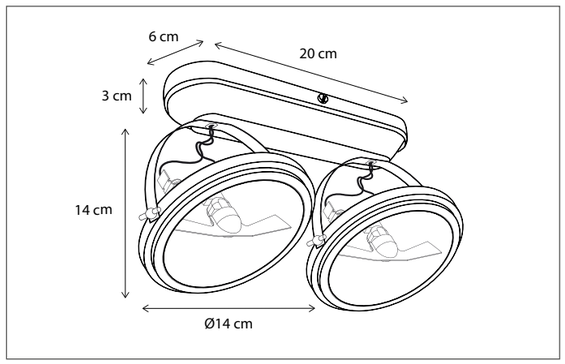

CODE	TYPE	FINISH	WATT	VOLT	FITTING
CEN0L2O02	Centonze on rounded profile 2L	Bronze	2 x 15	230	G53
CEN1L2O02	Centonze on rounded profile 2L	Brushed nickel	2 x 15	230	G53
CEN2L2O02	Centonze on rounded profile 2L	Chrome	2 x 15	230	G53

Contact us for:
Customization & connectivity

CENTONZE
ON SQUARE BASE

SPOT

Lamps not included, consult light source guide for our advice.

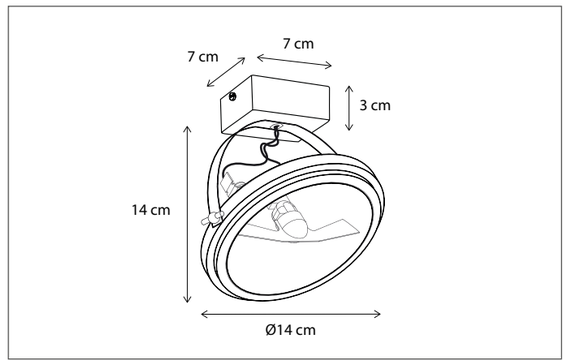



CODE	TYPE	FINISH	WATT	VOLT	FITTING
CEN0L1V70	Centonze on square base	Bronze	15	230	G53
CEN1L1V70	Centonze on square base	Brushed nickel	15	230	G53
CEN2L1V70	Centonze on square base	Chrome	15	230	G53

Contact us for:
Customization & connectivity

SCAN & DISCOVER
OUR PATENTED KELVIN KILLER®

INDOOR I SPOT I CENTONZE

Authentage Catalogus 2024 Authentage Katalogus 2024 Authentage Catalogue 2024 Authentage Katalog 2024 Authentage Verlichting Authentage Lighting Authentage éclairage Authentage Beleuchtung
Authentage Webshop Authentage Verlichting Authentage Armaturen Authentage Winkels Authentage Verkooppunten Authentage Verdelers Authentage Verdeelpunten Authentage België Authentage Nederland Authentage Vente en Ligne Authentage Boutique Vente en Ligne Authentage Luminaires Authentage éclairage
Authentage Revendeurs Authentage Points de vente Authentage Magasins Authentage Boutiques Authentage Points de distribution Authentage France Authentage Lighting Authentage Retailers Authentage Dealers Authentage Distributors Authentage Points of sale Authentage Resellers Authentage England
Authentage Beleuchtung Authent Beleuchtung Authentage Leuchten Authentage Händler Authentage Shops Authentage Verkaufsstellen Authentage Vertriebspartner Authentage Deutschland Authentage E-shop Authentage Geschäfte Authentage Vertriebsstellen

www.Bcosy.be - Waarschoot - België - Belgique - Belgium - Belgien tel 0032 (0) 9 378 24 30 Mail: info@bcosy.be

CENTONZE ON ROUND PLATE LARGE

SPOT

Lamps not included, consult light source guide for our advice.



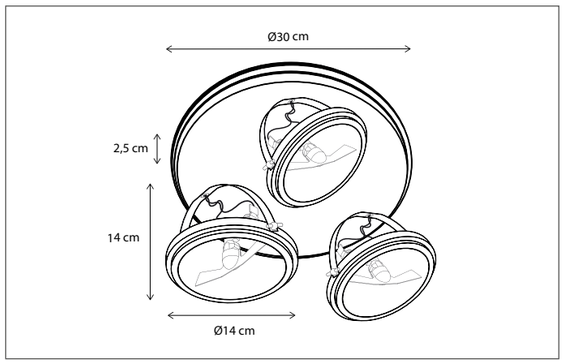

CODE	TYPE	FINISH	WATT	VOLT	FITTING
CEN0L3R30	Centonze on round plate 3L	Bronze	3 x 15	230	G53
CEN1L3R30	Centonze on round plate 3L	Brushed nickel	3 x 15	230	G53
CEN2L3R30	Centonze on round plate 3L	Chrome	3 x 15	230	G53

SCAN & DISCOVER
OUR PATENTED KELVIN KILLER®

Contact us for:
Customization & connectivity

CENTONZE M10

SPOT

Select the correct driver, see p486 accessories.
Lamps not included, consult light source guide for our advice.

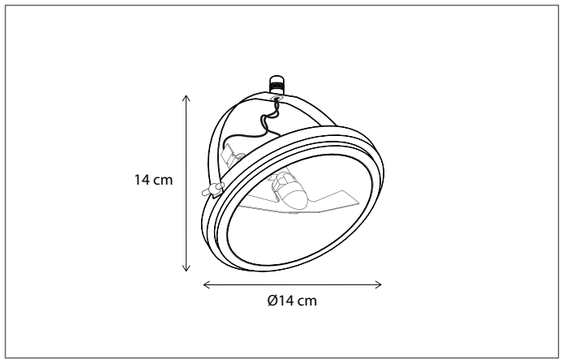



CODE	TYPE	FINISH	WATT	VOLT	FITTING
CEN0L1M01	Centonze M10	Bronze	15	12	G53
CEN1L1M01	Centonze M10	Brushed nickel	15	12	G53
CEN2L1M01	Centonze M10	Chrome	15	12	G53

Contact us for:
Customization & connectivity

INDOOR I SPOT I CENTONZE

Authentage Catalogus 2024 Authentage Katalogus 2024 Authentage Catalogue 2024 Authentage Katalog 2024 Authentage Verlichting Authentage Lighting Authentage éclairage Authentage Beleuchtung
Authentage Webshop Authentage Verlichting Authentage Armaturen Authentage Winkels Authentage Verkooppunten Authentage Verdelers Authentage Verdeelpunten Authentage België Authentage Nederland Authentage Vente en Ligne Authentage Boutique Vente en Ligne Authentage Luminaires Authentage éclairage
Authentage Revendeurs Authentage Points de vente Authentage Magasins Authentage Boutiques Authentage Points de distribution Authentage France Authentage Lighting Authentage Retailers Authentage Dealers Authentage Distributors Authentage Points of sale Authentage Resellers Authentage England
Authentage Beleuchtung Authent Beleuchtung Authentage Leuchten Authentage Händler Authentage Shops Authentage Verkaufsstellen Authentage Vertriebspartner Authentage Deutschland Authentage E-shop Authentage Geschäfte Authentage Vertriebsstellen

www.Bcosy.be - Waarschoot - België - Belgique - Belgium - Belgien tel 0032 (0) 9 378 24 30 Mail: info@bcosy.be



Customise your product, choose the length of the profile and number of spots.
Lamps not included, consult light source guide for our advice.



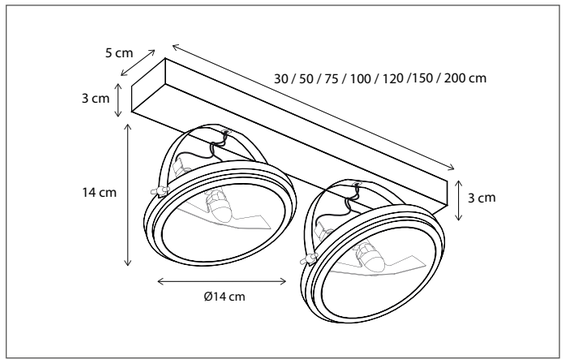

CODE	TYPE	FINISH	WATT	VOLT	FITTING
CEN0L2B03	Centonze on profile 30 cm - 2L	Bronze	2 x 15	230	G53
CEN0L3B05	Centonze on profile 50 cm - 3L	Bronze	3 x 15	230	G53
CEN0L4B07	Centonze on profile 75 cm - 4L	Bronze	4 x 15	230	G53
CEN0L4B10	Centonze on profile 100 cm - 4L	Bronze	4 x 15	230	G53
CEN0L4B12	Centonze on profile 120 cm - 4L	Bronze	4 x 15	230	G53
CEN0L4B15	Centonze on profile 150 cm - 4L	Bronze	4 x 15	230	G53
CEN0L4B20	Centonze on profile 200 cm - 4L	Bronze	4 x 15	230	G53
CEN0L1XTR	Centonze extra mounted on profile	Bronze	15	230	G53
CEN1L2B03	Centonze on profile 30 cm - 2L	Brushed nickel	2 x 15	230	G53
CEN1L3B05	Centonze on profile 50 cm - 3L	Brushed nickel	3 x 15	230	G53

SCAN & DISCOVER
OUR PATENTED KELVIN KILLER®

Contact us for:
Customization & connectivity

CODE	TYPE	FINISH	WATT	VOLT	FITTING
CEN1L4B07	Centonze on profile 75 cm - 4L	Brushed nickel	4 x 15	230	G53
CEN1L4B10	Centonze on profile 100 cm - 4L	Brushed nickel	4 x 15	230	G53
CEN1L4B12	Centonze on profile 120 cm - 4L	Brushed nickel	4 x 15	230	G53
CEN1L4B15	Centonze on profile 150 cm - 4L	Brushed nickel	4 x 15	230	G53
CEN1L4B20	Centonze on profile 200 cm - 4L	Brushed nickel	4 x 15	230	G53
CEN1L1XTR	Centonze extra mounted on profile	Brushed nickel	15	230	G53
CEN2L2B03	Centonze on profile 30 cm - 2L	Chrome	2 x 15	230	G53
CEN2L3B05	Centonze on profile 50 cm - 3L	Chrome	3 x 15	230	G53
CEN2L4B07	Centonze on profile 75 cm - 4L	Chrome	4 x 15	230	G53
CEN2L4B10	Centonze on profile 100 cm - 4L	Chrome	4 x 15	230	G53
CEN2L4B12	Centonze on profile 120 cm - 4L	Chrome	4 x 15	230	G53
CEN2L4B15	Centonze on profile 150 cm - 4L	Chrome	4 x 15	230	G53
CEN2L4B20	Centonze on profile 200 cm - 4L	Chrome	4 x 15	230	G53
CEN2L1XTR	Centonze extra mounted on profile	Chrome	15	230	G53

Contact us for:
Customization & connectivity

Authentage Catalogus 2024 Authentage Katalogus 2024 Authentage Catalogue 2024 Authentage Katalog 2024 Authentage Verlichting Authentage Lighting Authentage éclairage Authentage Beleuchtung
Authentage Webshop Authentage Verlichting Authentage Armaturen Authentage Winkels Authentage Verkooppunten Authentage Verdelers Authentage Verdeelpunten Authentage België Authentage Nederland Authentage Vente en Ligne Authentage Boutique Vente en Ligne Authentage Luminaires Authentage éclairage
Authentage Revendeurs Authentage Points de vente Authentage Magasins Authentage Boutiques Authentage Points de distribution Authentage France Authentage Lighting Authentage Retailers Authentage Dealers Authentage Distributors Authentage Points of sale Authentage Resellers Authentage England
Authentage Beleuchtung Authent Beleuchtung Authentage Leuchten Authentage Händler Authentage Shops Authentage Verkaufsstellen Authentage Vertriebspartner Authentage Deutschland Authentage E-shop Authentage Geschäfte Authentage Vertriebsstellen

www.Bcosy.be - Waarschoot - België - Belgique - Belgium - Belgien tel 0032 (0) 9 378 24 30 Mail: info@bcosy.be

CENTONZE CLASSIC

SPOT



Lamps not included, consult light source guide for our advice.



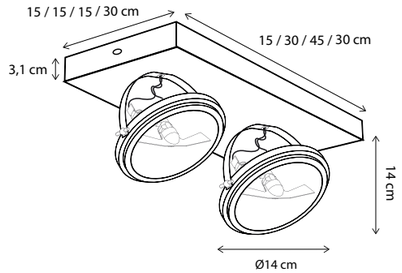

CODE	TYPE	FINISH	WATT	VOLT	FITTING
CEN0L1CO1	Centonze square box 1L - 15 x 15 cm	Bronze	15	230	G53
CEN0L2CO1	Centonze rectangular box 2L - 30 x 15 cm	Bronze	2 x 15	230	G53
CEN0L3CO1	Centonze rectangular box 3L - 45 x 15 cm	Bronze	3 x 15	230	G53
CEN0L4CO1	Centonze square box 4L - 30 x 30 cm	Bronze	4 x 15	230	G53
CEN1L1CO1	Centonze square box 1L - 15 x 15 cm	Brushed nickel	15	230	G53
CEN1L2CO1	Centonze rectangular box 2L - 30 x 15 cm	Brushed nickel	2 x 15	230	G53
CEN1L3CO1	Centonze rectangular box 3L - 45 x 15 cm	Brushed nickel	3 x 15	230	G53
CEN1L4CO1	Centonze square box 4L - 30 x 30 cm	Brushed nickel	4 x 15	230	G53
CEN2L1CO1	Centonze square box 1L - 15 x 15 cm	Chrome	15	230	G53
CEN2L2CO1	Centonze rectangular box 2L - 30 x 15 cm	Chrome	2 x 15	230	G53
CEN2L3CO1	Centonze rectangular box 3L - 45 x 15 cm	Chrome	3 x 15	230	G53
CEN2L4CO1	Centonze square box 4L - 30 x 30 cm	Chrome	4 x 15	230	G53

SCAN & DISCOVER
OUR PATENTED KELVIN KILLER®

Contact us for:
Customization & connectivity

COUPETTE ON SQUARE BASE

SPOT



Charmed by this design?
All Centonze items can be made available in Coupette variant.
Lamps not included, consult light source guide for our advice.

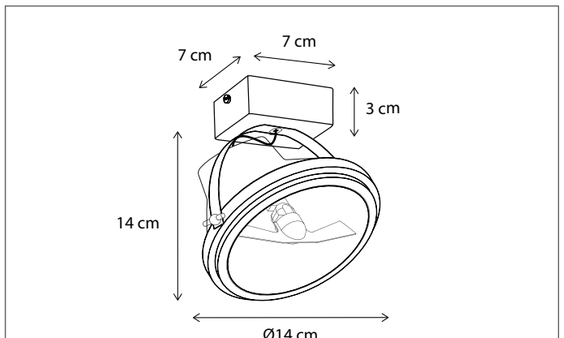



CODE	TYPE	FINISH	WATT	VOLT	FITTING
COU0L1V70	Coupette on square base	Bronze	15	230	GU10

Contact us for:
Customization & connectivity

Authentage Catalogus 2024 Authentage Katalogus 2024 Authentage Catalogue 2024 Authentage Katalog 2024 Authentage Verlichting Authentage Lighting Authentage éclairage Authentage Beleuchtung
Authentage Webshop Authentage Verlichting Authentage Armaturen Authentage Winkels Authentage Verkooppunten Authentage Verdelers Authentage Verdeelpunten Authentage België Authentage Nederland Authentage Vente en Ligne Authentage Boutique Vente en Ligne Authentage Luminaires Authentage éclairage
Authentage Revendeurs Authentage Points de vente Authentage Magasins Authentage Boutiques Authentage Points de distribution Authentage France Authentage Lighting Authentage Retailers Authentage Dealers Authentage Distributors Authentage Points of sale Authentage Resellers Authentage England
Authentage Beleuchtung Authent Beleuchtung Authentage Leuchten Authentage Händler Authentage Shops Authentage Verkaufsstellen Authentage Vertriebspartner Authentage Deutschland Authentage E-shop Authentage Geschäfte Authentage Vertriebsstellen

www.Bcosy.be - Waarschoot - België - Belgique - Belgium - Belgien tel 0032 (0) 9 378 24 30 Mail: info@bcosy.be

COUPETTE ON ROUNDED PROFILE

SPOT

Charmed by this design?
All Centonze items can be made available in Coupette variant.
Lamps not included, consult light source guide for our advice.



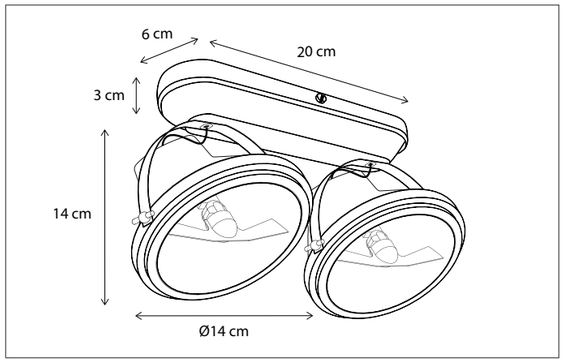

CODE	TYPE	FINISH	WATT	VOLT	FITTING
COU0L2O02	Coupette on rounded profile	Bronze	15	230	GU10

SCAN & DISCOVER
OUR PATENTED KELVIN KILLER®

Contact us for:
Customization & connectivity

LIT DISC WITH SPRINGS 7CM

SPOT

Select the correct driver, see p486 accessories.
Lamps not included, consult light source guide for our advice.

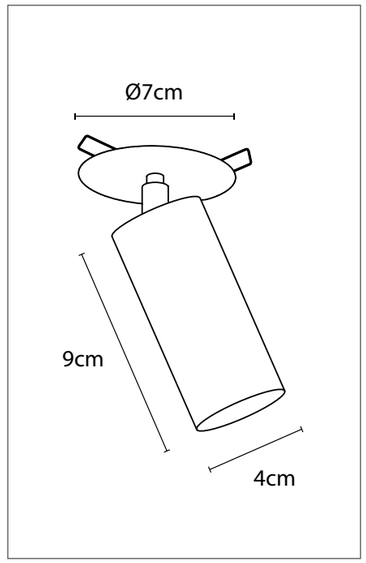



CODE	TYPE	FINISH	WATT	VOLT	FITTING
LIT001I70	Lit disc with springs 7cm	Bronze	5	12	G4

Contact us for:
Customization & connectivity

Authentage Catalogus 2024 Authentage Katalogus 2024 Authentage Catalogue 2024 Authentage Katalog 2024 Authentage Verlichting Authentage Lighting Authentage éclairage Authentage Beleuchtung
Authentage Webshop Authentage Verlichting Authentage Armaturen Authentage Winkels Authentage Verkooppunten Authentage Verdelers Authentage Verdeelpunten Authentage België Authentage Nederland Authentage Vente en Ligne Authentage Boutique Vente en Ligne Authentage Luminaires Authentage éclairage
Authentage Revendeurs Authentage Points de vente Authentage Magasins Authentage Boutiques Authentage Points de distribution Authentage France Authentage Lighting Authentage Retailers Authentage Dealers Authentage Distributors Authentage Points of sale Authentage Resellers Authentage England
Authentage Beleuchtung Authent Beleuchtung Authentage Leuchten Authentage Händler Authentage Shops Authentage Verkaufsstellen Authentage Vertriebspartner Authentage Deutschland Authentage E-shop Authentage Geschäfte Authentage Vertriebsstellen

www.Bcosy.be - Waarschoot - België - Belgique - Belgium - Belgien tel 0032 (0) 9 378 24 30 Mail: info@bcosy.be

LIT ON TUBE BASE

SPOT

Lamps not included, consult light source guide for our advice.



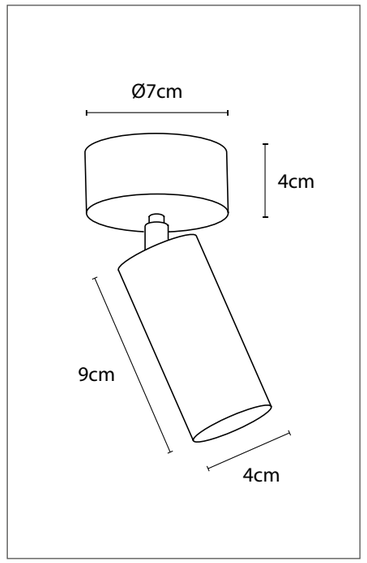

CODE	TYPE	FINISH	WATT	VOLT	FITTING
LIT001Y70	Lit on tube base	Bronze	5	230	G4

Contact us for:

Customization & connectivity

LIT ON LONG TUBE BASE

SPOT

Lamps not included, consult light source guide for our advice.

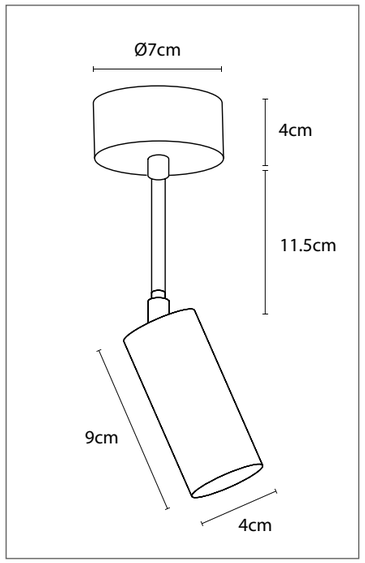



CODE	TYPE	FINISH	WATT	VOLT	FITTING
LIT001Y13	Lit on long tube base	Bronze	5	230	G4

Contact us for:

Customization & connectivity

INDOOR I SPOT I LIT

Authentage Catalogus 2024 Authentage Katalogus 2024 Authentage Catalogue 2024 Authentage Katalog 2024 Authentage Verlichting Authentage Lighting Authentage éclairage Authentage Beleuchtung
Authentage Webshop Authentage Verlichting Authentage Armaturen Authentage Winkels Authentage Verkooppunten Authentage Verdelers Authentage Verdeelpunten Authentage België Authentage Nederland Authentage Vente en Ligne Authentage Boutique Vente en Ligne Authentage Luminaires Authentage éclairage
Authentage Revendeurs Authentage Points de vente Authentage Magasins Authentage Boutiques Authentage Points de distribution Authentage France Authentage Lighting Authentage Retailers Authentage Dealers Authentage Distributors Authentage Points of sale Authentage Resellers Authentage England
Authentage Beleuchtung Authent Beleuchtung Authentage Leuchten Authentage Händler Authentage Shops Authentage Verkaufsstellen Authentage Vertriebspartner Authentage Deutschland Authentage E-shop Authentage Geschäfte Authentage Vertriebsstellen

www.Bcosy.be - Waarschoot - België - Belgique - Belgium - Belgien tel 0032 (0) 9 378 24 30 Mail: info@bcosy.be

LIT ON SQUARE BASE

SPOT

Lamps not included, consult light source guide for our advice.



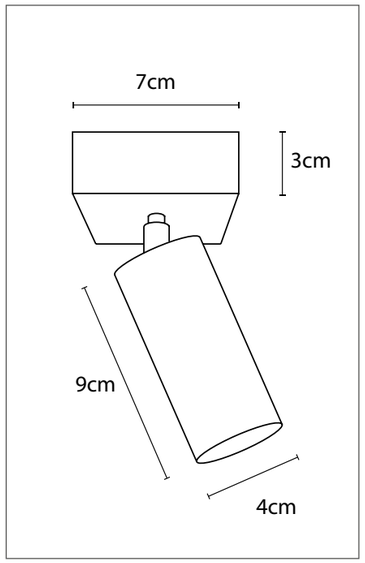

CODE	TYPE	FINISH	WATT	VOLT	FITTING
LIT001V70	Lit on square base	Bronze	5	230	G4

Contact us for:

Customization & connectivity

LIT ON PROFILE

SPOT

Lamps not included, consult light source guide for our advice.

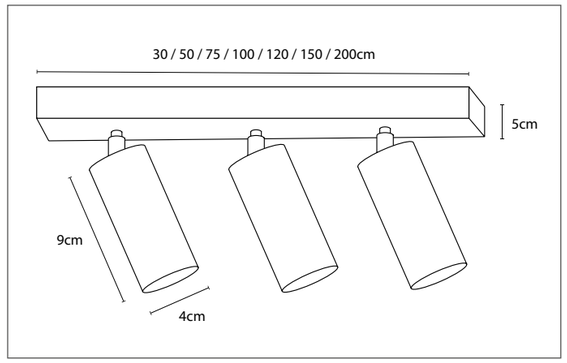



CODE	TYPE	FINISH	WATT	VOLT	FITTING
LIT002B03	Lit on profile 30 cm 2L	Bronze	2 x 5	230	G4
LIT003B05	Lit on profile 50 cm 3L	Bronze	3 x 5	230	G4
LIT004B07	Lit on profile 75 cm 4L	Bronze	4 x 5	230	G4
LIT004B10	Lit on profile 100 cm 4L	Bronze	4 x 5	230	G4
LIT004B12	Lit on profile 120 cm 4L	Bronze	4 x 5	230	G4
LIT005B15	Lit on profile 150 cm 5L	Bronze	5 x 5	230	G4
LIT005B20	Lit on profile 200 cm 5L	Bronze	5 x 5	230	G4
LIT001XTR	Lit extra mounted on profile	Bronze	5	230	G4

Contact us for:

Customization & connectivity

INDOOR I SPOT I LIT

Authentage Catalogus 2024 Authentage Katalogus 2024 Authentage Catalogue 2024 Authentage Katalog 2024 Authentage Verlichting Authentage Lighting Authentage éclairage Authentage Beleuchtung
Authentage Webshop Authentage Verlichting Authentage Armaturen Authentage Winkels Authentage Verkooppunten Authentage Verdelers Authentage Verdeelpunten Authentage België Authentage Nederland Authentage Vente en Ligne Authentage Boutique Vente en Ligne Authentage Luminaires Authentage éclairage
Authentage Revendeurs Authentage Points de vente Authentage Magasins Authentage Boutiques Authentage Points de distribution Authentage France Authentage Lighting Authentage Retailers Authentage Dealers Authentage Distributors Authentage Points of sale Authentage Resellers Authentage England
Authentage Beleuchtung Authent Beleuchtung Authentage Leuchten Authentage Händler Authentage Shops Authentage Verkaufsstellen Authentage Vertriebspartner Authentage Deutschland Authentage E-shop Authentage Geschäfte Authentage Vertriebsstellen

www.Bcosy.be - Waarschoot - België - Belgique - Belgium - Belgien tel 0032 (0) 9 378 24 30 Mail: info@bcosy.be

MARRON DISC WITH SPRINGS

SPOT

Select the correct driver, see p486 accessories.
Lamps not included, consult light source guide for our advice.



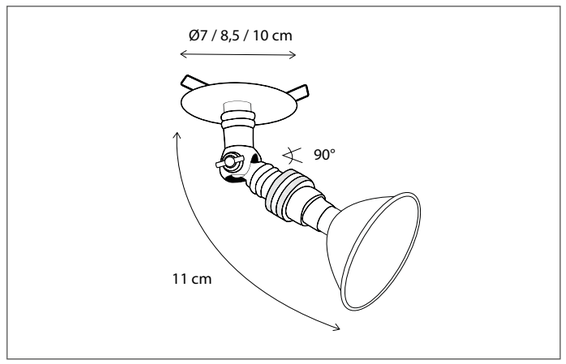

CODE	TYPE	FINISH	WATT	VOLT	FITTING
MAR0L1I70	Marron disc with springs 7 cm	Bronze	8	12	BA15d
MAR0L1I85	Marron disc with springs 8,5 cm	Bronze	8	12	BA15d
MAR0L1I10	Marron disc with springs 10 cm	Bronze	8	12	BA15d
MAR1L1I70	Marron disc with springs 7 cm	Brushed nickel	8	12	BA15d
MAR1L1I85	Marron disc with springs 8,5 cm	Brushed nickel	8	12	BA15d
MAR1L1I10	Marron disc with springs 10 cm	Brushed nickel	8	12	BA15d
MAR2L1I70	Marron disc with springs 7 cm	Chrome	8	12	BA15d
MAR2L1I85	Marron disc with springs 8,5 cm	Chrome	8	12	BA15d
MAR2L1I10	Marron disc with springs 10 cm	Chrome	8	12	BA15d

Contact us for:
Customization & connectivity

MARRON ROSAS WITH SPRINGS

SPOT

Select the correct driver, see p486 accessories.
Lamps not included, consult light source guide for our advice.

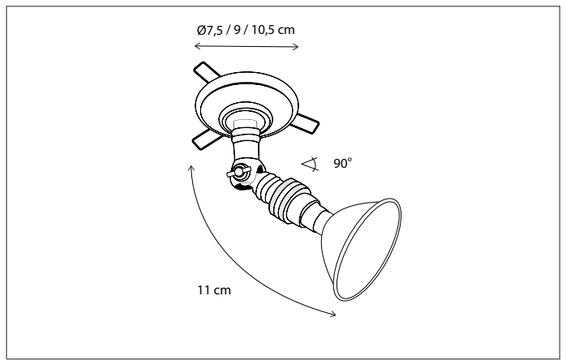



CODE	TYPE	FINISH	WATT	VOLT	FITTING
MAR0L1J75	Marron rosas with springs 7,5 cm	Bronze	8	12	BA15d
MAR0L1J90	Marron rosas with springs 9 cm	Bronze	8	12	BA15d
MAR0L1J10	Marron rosas with springs 10,5 cm	Bronze	8	12	BA15d
MAR1L1J75	Marron rosas with springs 7,5 cm	Brushed nickel	8	12	BA15d
MAR1L1J90	Marron rosas with springs 9 cm	Brushed nickel	8	12	BA15d
MAR1L1J10	Marron rosas with springs 10,5 cm	Brushed nickel	8	12	BA15d
MAR2L1J75	Marron rosas with springs 7,5 cm	Chrome	8	12	BA15d
MAR2L1J90	Marron rosas with springs 9 cm	Chrome	8	12	BA15d
MAR2L1J10	Marron rosas with springs 10,5 cm	Chrome	8	12	BA15d

Contact us for:
Customization & connectivity

INDOOR I SPOT I MARRON

Authentage Catalogus 2024 Authentage Katalogus 2024 Authentage Catalogue 2024 Authentage Katalog 2024 Authentage Verlichting Authentage Lighting Authentage éclairage Authentage Beleuchtung
Authentage Webshop Authentage Verlichting Authentage Armaturen Authentage Winkels Authentage Verkooppunten Authentage Verdelers Authentage Verdeelpunten Authentage België Authentage Nederland Authentage Vente en Ligne Authentage Boutique Vente en Ligne Authentage Luminaires Authentage éclairage
Authentage Revendeurs Authentage Points de vente Authentage Magasins Authentage Boutiques Authentage Points de distribution Authentage France Authentage Lighting Authentage Retailers Authentage Dealers Authentage Distributors Authentage Points of sale Authentage Resellers Authentage England
Authentage Beleuchtung Authent Beleuchtung Authentage Leuchten Authentage Händler Authentage Shops Authentage Verkaufsstellen Authentage Vertriebspartner Authentage Deutschland Authentage E-shop Authentage Geschäfte Authentage Vertriebsstellen

www.Bcosy.be - Waarschoot - België - Belgique - Belgium - Belgien tel 0032 (0) 9 378 24 30 Mail: info@bcosy.be

MARRON MOUNTED BASE

SPOT

Select the correct driver, see p486 accessories.
Lamps not included, consult light source guide for our advice.



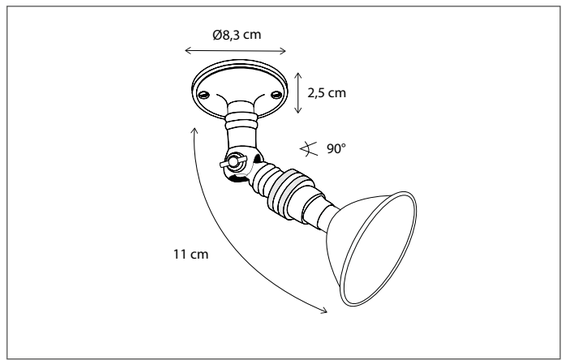

CODE	TYPE	FINISH	WATT	VOLT	FITTING
MAR0L1G83	Marron mounted base	Bronze	8	12	BA15d
MAR1L1G83	Marron mounted base	Brushed nickel	8	12	BA15d
MAR2L1G83	Marron mounted base	Chrome	8	12	BA15d

Contact us for:
Customization & connectivity

MARRON ON ROUND BASE

SPOT

Lamps not included, consult light source guide for our advice.

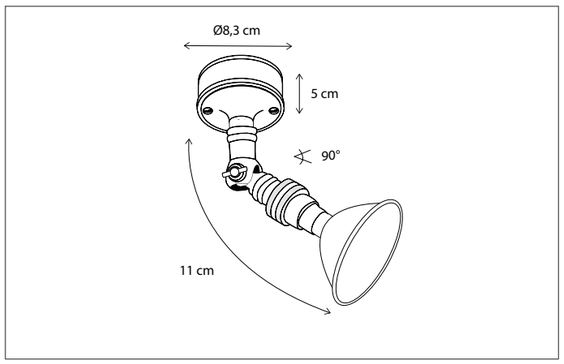



CODE	TYPE	FINISH	WATT	VOLT	FITTING
MAR0L1F83	Marron on round base	Bronze	8	230	BA15d
MAR1L1F83	Marron on round base	Brushed nickel	8	230	BA15d
MAR2L1F83	Marron on round base	Chrome	8	230	BA15d

Contact us for:
Customization & connectivity

INDOOR I SPOT I MARRON

Authentage Catalogus 2024 Authentage Katalogus 2024 Authentage Catalogue 2024 Authentage Katalog 2024 Authentage Verlichting Authentage Lighting Authentage éclairage Authentage Beleuchtung
Authentage Webshop Authentage Verlichting Authentage Armaturen Authentage Winkels Authentage Verkooppunten Authentage Verdelers Authentage Verdeelpunten Authentage België Authentage Nederland Authentage Vente en Ligne Authentage Boutique Vente en Ligne Authentage Luminaires Authentage éclairage
Authentage Revendeurs Authentage Points de vente Authentage Magasins Authentage Boutiques Authentage Points de distribution Authentage France Authentage Lighting Authentage Retailers Authentage Dealers Authentage Distributors Authentage Points of sale Authentage Resellers Authentage England
Authentage Beleuchtung Authent Beleuchtung Authentage Leuchten Authentage Händler Authentage Shops Authentage Verkaufsstellen Authentage Vertriebspartner Authentage Deutschland Authentage E-shop Authentage Geschäfte Authentage Vertriebsstellen

www.Bcosy.be - Waarschoot - België - Belgique - Belgium - Belgien tel 0032 (0) 9 378 24 30 Mail: info@bcosy.be

MARRON ON ROUNDED PROFILE

SPOT

IP 20 DI

Lamps not included, consult light source guide for our advice.



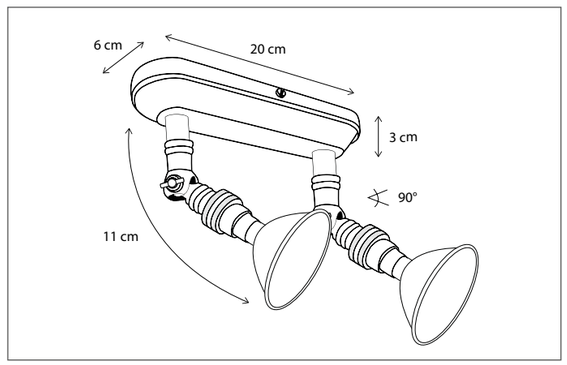

CODE	TYPE	FINISH	WATT	VOLT	FITTING
MAR0L2O02	Marron on rounded profile 2L	Bronze	2 x 8	230	BA15d
MAR1L2O02	Marron on rounded profile 2L	Brushed nickel	2 x 8	230	BA15d
MAR2L2O02	Marron on rounded profile 2L	Chrome	2 x 8	230	BA15d

Contact us for:

Customization & connectivity

MARRON ON SQUARE BASE

SPOT

IP 20 DI

Lamps not included, consult light source guide for our advice.

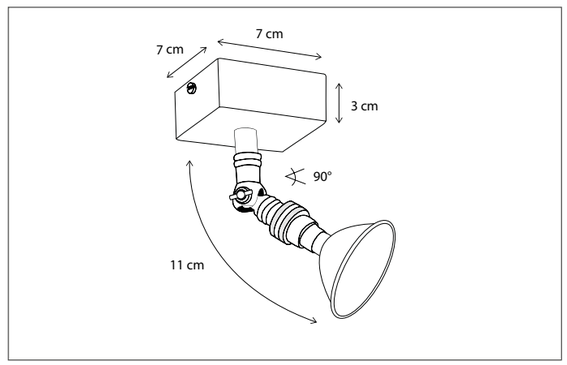



CODE	TYPE	FINISH	WATT	VOLT	FITTING
MAR0L1V70	Marron on square base	Bronze	8	230	BA15d
MAR1L1V70	Marron on square base	Brushed nickel	8	230	BA15d
MAR2L1V70	Marron on square base	Chrome	8	230	BA15d

Contact us for:

Customization & connectivity

INDOOR I SPOT I MARRON

Authentage Catalogus 2024 Authentage Katalogus 2024 Authentage Catalogue 2024 Authentage Katalog 2024 Authentage Verlichting Authentage Lighting Authentage éclairage Authentage Beleuchtung
Authentage Webshop Authentage Verlichting Authentage Armaturen Authentage Winkels Authentage Verkooppunten Authentage Verdelers Authentage Verdeelpunten Authentage België Authentage Nederland Authentage Vente en Ligne Authentage Boutique Vente en Ligne Authentage Luminaires Authentage éclairage
Authentage Revendeurs Authentage Points de vente Authentage Magasins Authentage Boutiques Authentage Points de distribution Authentage France Authentage Lighting Authentage Retailers Authentage Dealers Authentage Distributors Authentage Points of sale Authentage Resellers Authentage England
Authentage Beleuchtung Authent Beleuchtung Authentage Leuchten Authentage Händler Authentage Shops Authentage Verkaufsstellen Authentage Vertriebspartner Authentage Deutschland Authentage E-shop Authentage Geschäfte Authentage Vertriebsstellen

www.Bcosy.be - Waarschoot - België - Belgique - Belgium - Belgien tel 0032 (0) 9 378 24 30 Mail: info@bcosy.be

MARRON ON SQUARE BASE MEDIUM

SPOT

IP 20

Lamps not included, consult light source guide for our advice.



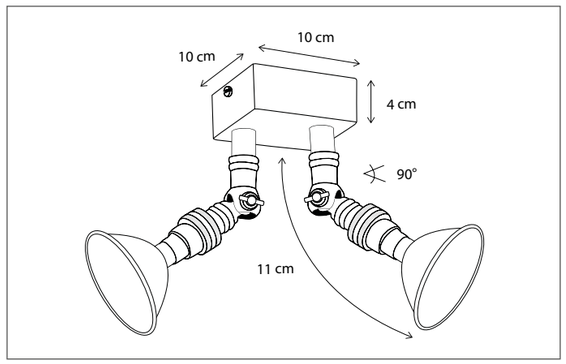

CODE	TYPE	FINISH	WATT	VOLT	FITTING
MAR0L2V10	Marron on square base 2L	Bronze	2 x 8	230	BA15d
MAR1L2V10	Marron on square base 2L	Brushed nickel	2 x 8	230	BA15d
MAR2L2V10	Marron on square base 2L	Chrome	2 x 8	230	BA15d

Contact us for:
Customization & connectivity

MARRON ON SQUARE BASE LARGE

SPOT

IP 20

Lamps not included, consult light source guide for our advice.

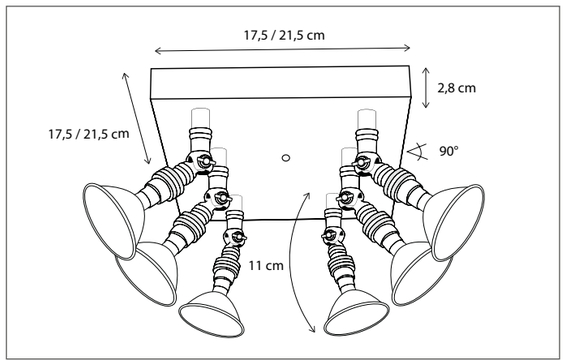



CODE	TYPE	FINISH	WATT	VOLT	FITTING
MAR0L4V17	Marron on square base 4L	Bronze	4 x 8	230	BA15d
MAR0L6V21	Marron on square base 6L	Bronze	6 x 8	230	BA15d
MAR1L4V17	Marron on square base 4L	Brushed nickel	4 x 8	230	BA15d
MAR1L6V21	Marron on square base 6L	Brushed nickel	6 x 8	230	BA15d
MAR2L4V17	Marron on square base 4L	Chrome	4 x 8	230	BA15d
MAR2L6V21	Marron on square base 6L	Chrome	6 x 8	230	BA15d

Contact us for:
Customization & connectivity

INDOOR I SPOT I MARRON

Authentage Catalogus 2024 Authentage Katalogus 2024 Authentage Catalogue 2024 Authentage Katalog 2024 Authentage Verlichting Authentage Lighting Authentage éclairage Authentage Beleuchtung
Authentage Webshop Authentage Verlichting Authentage Armaturen Authentage Winkels Authentage Verkooppunten Authentage Verdelers Authentage Verdeelpunten Authentage België Authentage Nederland Authentage Vente en Ligne Authentage Boutique Vente en Ligne Authentage Luminaires Authentage éclairage
Authentage Revendeurs Authentage Points de vente Authentage Magasins Authentage Boutiques Authentage Points de distribution Authentage France Authentage Lighting Authentage Retailers Authentage Dealers Authentage Distributors Authentage Points of sale Authentage Resellers Authentage England
Authentage Beleuchtung Authent Beleuchtung Authentage Leuchten Authentage Händler Authentage Shops Authentage Verkaufsstellen Authentage Vertriebspartner Authentage Deutschland Authentage E-shop Authentage Geschäfte Authentage Vertriebsstellen

www.Bcosy.be - Waarschoot - België - Belgique - Belgium - Belgien tel 0032 (0) 9 378 24 30 Mail: info@bcosy.be

MARRON ON ROUND PLATE LARGE

SPOT

IP 20

Lamps not included, consult light source guide for our advice.



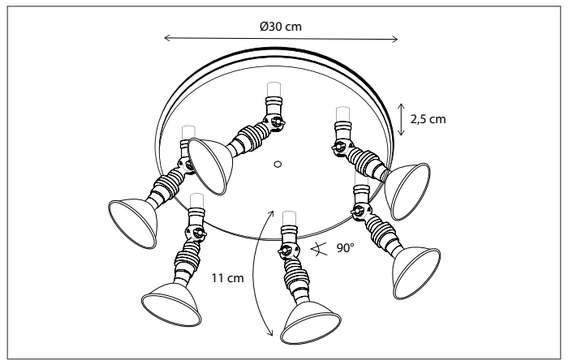

CODE	TYPE	FINISH	WATT	VOLT	FITTING
MAR0L3R30	Marron on round plate 3L	Bronze	3 x 8	230	BA15d
MAR0L6R30	Marron on round plate 6L	Bronze	6 x 8	230	BA15d
MAR1L3R30	Marron on round plate 3L	Brushed nickel	3 x 8	230	BA15d
MAR1L6R30	Marron on round plate 6L	Brushed nickel	6 x 8	230	BA15d
MAR2L3R30	Marron on round plate 3L	Chrome	3 x 8	230	BA15d
MAR2L6R30	Marron on round plate 6L	Chrome	6 x 8	230	BA15d

Contact us for:
Customization & connectivity

MARRON M10

SPOT

IP 20

Select the correct driver, see p486 accessories.
Lamps not included, consult light source guide for our advice.

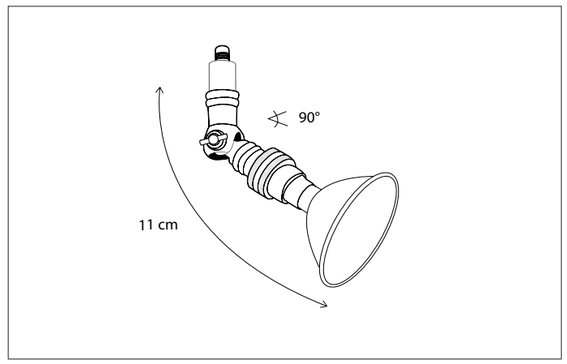



CODE	TYPE	FINISH	WATT	VOLT	FITTING
MAR0L1M01	Marron M10	Bronze	8	12	BA15d
MAR1L1M01	Marron M10	Brushed nickel	8	12	BA15d
MAR2L1M01	Marron M10	Chrome	8	12	BA15d

Contact us for:
Customization & connectivity

INDOOR I SPOT I MARRON

Authentage Catalogus 2024 Authentage Katalogus 2024 Authentage Catalogue 2024 Authentage Katalog 2024 Authentage Verlichting Authentage Lighting Authentage éclairage Authentage Beleuchtung
Authentage Webshop Authentage Verlichting Authentage Armaturen Authentage Winkels Authentage Verkooppunten Authentage Verdelers Authentage Verdeelpunten Authentage België Authentage Nederland Authentage Vente en Ligne Authentage Boutique Vente en Ligne Authentage Luminaires Authentage éclairage
Authentage Revendeurs Authentage Points de vente Authentage Magasins Authentage Boutiques Authentage Points de distribution Authentage France Authentage Lighting Authentage Retailers Authentage Dealers Authentage Distributors Authentage Points of sale Authentage Resellers Authentage England
Authentage Beleuchtung Authent Beleuchtung Authentage Leuchten Authentage Händler Authentage Shops Authentage Verkaufsstellen Authentage Vertriebspartner Authentage Deutschland Authentage E-shop Authentage Geschäfte Authentage Vertriebsstellen

www.Bcosy.be - Waarschoot - België - Belgique - Belgium - Belgien tel 0032 (0) 9 378 24 30 Mail: info@bcosy.be



Customise your product, choose the length of the profile and number of spots.
Lamps not included, consult light source guide for our advice.



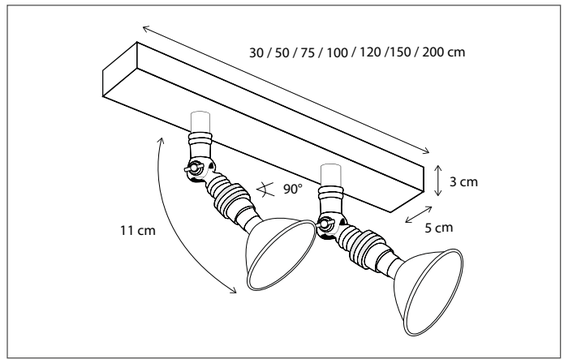

CODE	TYPE	FINISH	WATT	VOLT	FITTING
MAR0L2B03	Marron on profile 30 cm - 2L	Bronze	2 x 8	230	BA15d
MAR0L3B05	Marron on profile 50 cm - 3L	Bronze	3 x 8	230	BA15d
MAR0L4B07	Marron on profile 75 cm - 4L	Bronze	4 x 8	230	BA15d
MAR0L4B10	Marron on profile 100 cm - 4L	Bronze	4 x 8	230	BA15d
MAR0L4B12	Marron on profile 120 cm - 4L	Bronze	4 x 8	230	BA15d
MAR0L4B15	Marron on profile 150 cm - 4L	Bronze	4 x 8	230	BA15d
MAR0L4B20	Marron on profile 200 cm - 4L	Bronze	4 x 8	230	BA15d
MAR0L1XTR	Marron extra mounted on profile	Bronze	8	230	BA15d
MAR1L2B03	Marron on profile 30 cm - 2L	Brushed nickel	2 x 8	230	BA15d
MAR1L3B05	Marron on profile 50 cm - 3L	Brushed nickel	3 x 8	230	BA15d

Contact us for:
Customization & connectivity

CODE	TYPE	FINISH	WATT	VOLT	FITTING
MAR1L4B07	Marron on profile 75 cm - 4L	Brushed nickel	4 x 8	230	BA15d
MAR1L4B10	Marron on profile 100 cm - 4L	Brushed nickel	4 x 8	230	BA15d
MAR1L4B12	Marron on profile 120 cm - 4L	Brushed nickel	4 x 8	230	BA15d
MAR1L4B15	Marron on profile 150 cm - 4L	Brushed nickel	4 x 8	230	BA15d
MAR1L4B20	Marron on profile 200 cm - 4L	Brushed nickel	4 x 8	230	BA15d
MAR1L1XTR	Marron extra mounted on profile	Brushed nickel	8	230	BA15d
MAR2L2B03	Marron on profile 30 cm - 2L	Chrome	2 x 8	230	BA15d
MAR2L3B05	Marron on profile 50 cm - 3L	Chrome	3 x 8	230	BA15d
MAR2L4B07	Marron on profile 75 cm - 4L	Chrome	4 x 8	230	BA15d
MAR2L4B10	Marron on profile 100 cm - 4L	Chrome	4 x 8	230	BA15d
MAR2L4B12	Marron on profile 120 cm - 4L	Chrome	4 x 8	230	BA15d
MAR2L4B15	Marron on profile 150 cm - 4L	Chrome	4 x 8	230	BA15d
MAR2L4B20	Marron on profile 200 cm - 4L	Chrome	4 x 8	230	BA15d
MAR2L1XTR	Marron extra mounted on profile	Chrome	8	230	BA15d

Contact us for:
Customization & connectivity

INDOOR I SPOT I MARRON

Authentage Catalogus 2024 Authentage Katalogus 2024 Authentage Catalogue 2024 Authentage Katalog 2024 Authentage Verlichting Authentage Lighting Authentage éclairage Authentage Beleuchtung
Authentage Webshop Authentage Verlichting Authentage Armaturen Authentage Winkels Authentage Verkooppunten Authentage Verdelers Authentage Verdeelpunten Authentage België Authentage Nederland Authentage Vente en Ligne Authentage Boutique Vente en Ligne Authentage Luminaires Authentage éclairage
Authentage Revendeurs Authentage Points de vente Authentage Magasins Authentage Boutiques Authentage Points de distribution Authentage France Authentage Lighting Authentage Retailers Authentage Dealers Authentage Distributors Authentage Points of sale Authentage Resellers Authentage England
Authentage Beleuchtung Authent Beleuchtung Authentage Leuchten Authentage Händler Authentage Shops Authentage Verkaufsstellen Authentage Vertriebspartner Authentage Deutschland Authentage E-shop Authentage Geschäfte Authentage Vertriebsstellen

www.Bcosy.be - Waarschoot - België - Belgique - Belgium - Belgien tel 0032 (0) 9 378 24 30 Mail: info@bcosy.be

COMETE DISC WITH SPRINGS

SPOT

Available in 2 versions: GU10 (no driver required) or BA15d (driver required).
For BA15d, select the correct driver p486 accessories.
Lamps not included, consult light source guide for our advice.



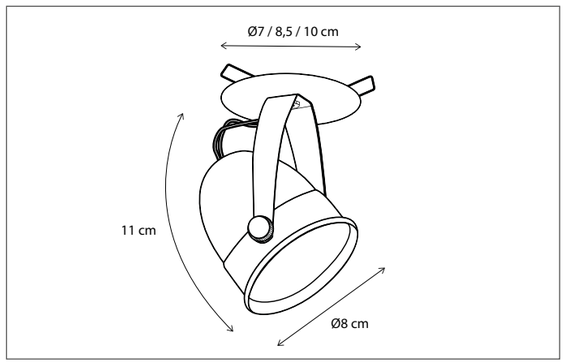

CODE	TYPE	FINISH	WATT	VOLT	FITTING
COM0L1I70	Comète disc with springs 7 cm	Bronze	8	230	GU10
COM0L1I85	Comète disc with springs 8,5 cm	Bronze	8	230	GU10
COM0L1I10	Comète disc with springs 10 cm	Bronze	8	230	GU10
COM1L1I70	Comète disc with springs 7 cm	Brushed nickel	8	230	GU10
COM1L1I85	Comète disc with springs 8,5 cm	Brushed nickel	8	230	GU10
COM1L1I10	Comète disc with springs 10 cm	Brushed nickel	8	230	GU10
COM2L1I70	Comète disc with springs 7 cm	Chrome	8	230	GU10
COM2L1I85	Comète disc with springs 8,5 cm	Chrome	8	230	GU10
COM2L1I10	Comète disc with springs 10 cm	Chrome	8	230	GU10

Contact us for:
Customization & connectivity

COMETE DISC WITH SPRINGS

SPOT

CODE	TYPE	FINISH	WATT	VOLT	FITTING
COM001I70	Comète disc with springs 7 cm	Bronze	8	12	BA15d
COM001I85	Comète disc with springs 8,5 cm	Bronze	8	12	BA15d
COM001I10	Comète disc with springs 10 cm	Bronze	8	12	BA15d
COM101I70	Comète disc with springs 7 cm	Brushed nickel	8	12	BA15d
COM101I85	Comète disc with springs 8,5 cm	Brushed nickel	8	12	BA15d
COM101I10	Comète disc with springs 10 cm	Brushed nickel	8	12	BA15d
COM201I70	Comète disc with springs 7 cm	Chrome	8	12	BA15d
COM201I85	Comète disc with springs 8,5 cm	Chrome	8	12	BA15d
COM201I10	Comète disc with springs 10 cm	Chrome	8	12	BA15d

Contact us for:
Customization & connectivity

INDOOR I SPOT I COMETE

Authentage Catalogus 2024 Authentage Katalogus 2024 Authentage Catalogue 2024 Authentage Katalog 2024 Authentage Verlichting Authentage Lighting Authentage éclairage Authentage Beleuchtung
Authentage Webshop Authentage Verlichting Authentage Armaturen Authentage Winkels Authentage Verkooppunten Authentage Verdelers Authentage Verdeelpunten Authentage België Authentage Nederland Authentage Vente en Ligne Authentage Boutique Vente en Ligne Authentage Luminaires Authentage éclairage
Authentage Revendeurs Authentage Points de vente Authentage Magasins Authentage Boutiques Authentage Points de distribution Authentage France Authentage Lighting Authentage Retailers Authentage Dealers Authentage Distributors Authentage Points of sale Authentage Resellers Authentage England
Authentage Beleuchtung Authent Beleuchtung Authentage Leuchten Authentage Händler Authentage Shops Authentage Verkaufsstellen Authentage Vertriebspartner Authentage Deutschland Authentage E-shop Authentage Geschäfte Authentage Vertriebsstellen

www.Bcosy.be - Waarschoot - België - Belgique - Belgium - Belgien tel 0032 (0) 9 378 24 30 Mail: info@bcosy.be

COMETE ROSAS WITH SPRING

SPOT

Available in 2 versions: GU10 (no driver required) or BA15d (driver required).
For BA15d, select the correct driver p486 accessories.
Lamps not included, consult light source guide for our advice.



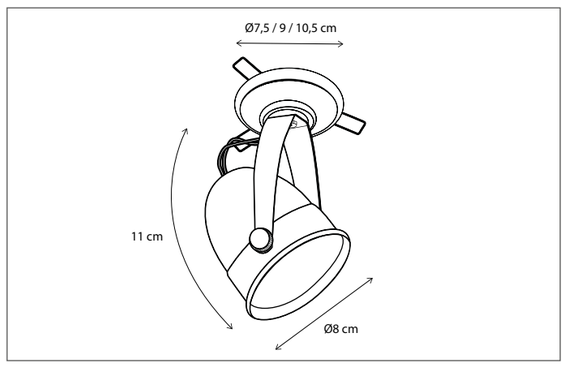

CODE	TYPE	FINISH	WATT	VOLT	FITTING
COM0L1J75	Comète rosas with springs 7,5 cm	Bronze	8	230	GU10
COM0L1J90	Comète rosas with springs 9 cm	Bronze	8	230	GU10
COM0L1J10	Comète rosas with springs 10,5 cm	Bronze	8	230	GU10
COM1L1J75	Comète rosas with springs 7,5 cm	Brushed nickel	8	230	GU10
COM1L1J90	Comète rosas with springs 9 cm	Brushed nickel	8	230	GU10
COM1L1J10	Comète rosas with springs 10,5 cm	Brushed nickel	8	230	GU10
COM2L1J75	Comète rosas with springs 7,5 cm	Chrome	8	230	GU10
COM2L1J90	Comète rosas with springs 9 cm	Chrome	8	230	GU10
COM2L1J10	Comète rosas with springs 10,5 cm	Chrome	8	230	GU10
COM001J75	Comète rosas with springs 7,5 cm	Bronze	8	12	BA15d
COM001J90	Comète rosas with springs 9 cm	Bronze	8	12	BA15d
COM001J10	Comète rosas with springs 10,5 cm	Bronze	8	12	BA15d
COM101J75	Comète rosas with springs 7,5 cm	Brushed nickel	8	12	BA15d
COM101J90	Comète rosas with springs 9 cm	Brushed nickel	8	12	BA15d
COM101J10	Comète rosas with springs 10,5 cm	Brushed nickel	8	12	BA15d
COM201J75	Comète rosas with springs 7,5 cm	Chrome	8	12	BA15d
COM201J90	Comète rosas with springs 9 cm	Chrome	8	12	BA15d
COM201J10	Comète rosas with springs 10,5 cm	Chrome	8	12	BA15d

Contact us for:
Customization & connectivity

COMETE MOUNTED BASE

SPOT

Available in 2 versions: GU10 (no driver required) or BA15d (driver required).
For BA15d, select the correct driver p486 accessories.
Lamps not included, consult light source guide for our advice.

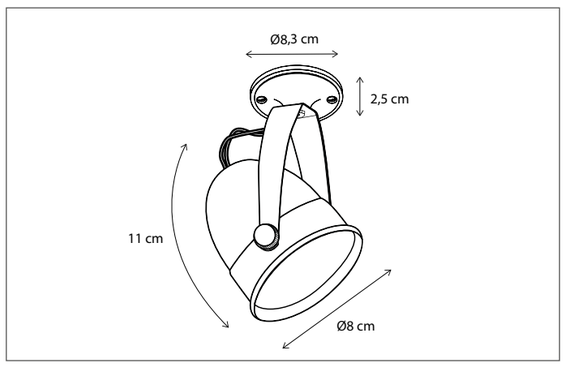



CODE	TYPE	FINISH	WATT	VOLT	FITTING
COM0L1G83	Comète mounted base	Bronze	8	230	GU10
COM1L1G83	Comète mounted base	Brushed nickel	8	230	GU10
COM2L1G83	Comète mounted base	Chrome	8	230	GU10
COM001G83	Comète mounted base	Bronze	8	12	BA15d
COM101G83	Comète mounted base	Brushed nickel	8	12	BA15d
COM201G83	Comète mounted base	Chrome	8	12	BA15d

Contact us for:
Customization & connectivity

INDOOR I SPOT I COMETE

Authentage Catalogus 2024 Authentage Katalogus 2024 Authentage Catalogue 2024 Authentage Katalog 2024 Authentage Verlichting Authentage Lighting Authentage éclairage Authentage Beleuchtung
Authentage Webshop Authentage Verlichting Authentage Armaturen Authentage Winkels Authentage Verkooppunten Authentage Verdelers Authentage Verdeelpunten Authentage België Authentage Nederland Authentage Vente en Ligne Authentage Boutique Vente en Ligne Authentage Luminaires Authentage éclairage
Authentage Revendeurs Authentage Points de vente Authentage Magasins Authentage Boutiques Authentage Points de distribution Authentage France Authentage Lighting Authentage Retailers Authentage Dealers Authentage Distributors Authentage Points of sale Authentage Resellers Authentage England
Authentage Beleuchtung Authent Beleuchtung Authentage Leuchten Authentage Händler Authentage Shops Authentage Verkaufsstellen Authentage Vertriebspartner Authentage Deutschland Authentage E-shop Authentage Geschäfte Authentage Vertriebsstellen

www.Bcosy.be - Waarschoot - België - Belgique - Belgium - Belgien tel 0032 (0) 9 378 24 30 Mail: info@bcosy.be

COMETE
ON ROUND BASE

SPOT

Available in 2 versions: GU10 (no driver required) or BA15d (driver required & included).
Lamps not included, consult light source guide for our advice.



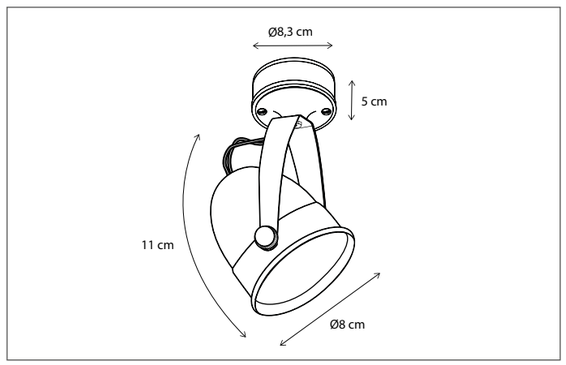

CODE	TYPE	FINISH	WATT	VOLT	FITTING
COM0L1F83	Comète on round base	Bronze	8	230	GU10
COM1L1F83	Comète on round base	Brushed nickel	8	230	GU10
COM2L1F83	Comète on round base	Chrome	8	230	GU10
COM001F83	Comète on round base	Bronze	8	230	BA15d
COM101F83	Comète on round base	Brushed nickel	8	230	BA15d
COM201F83	Comète on round base	Chrome	8	230	BA15d

Contact us for:
Customization & connectivity

COMETE
ON ROUNDED PROFILE

SPOT

Available in 2 versions: GU10 (no driver required) or BA15d (driver required & included).
Lamps not included, consult light source guide for our advice.

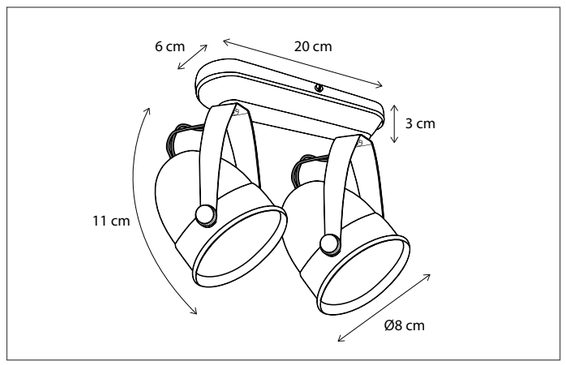



CODE	TYPE	FINISH	WATT	VOLT	FITTING
COM0L2O02	Comète on rounded profile 2L	Bronze	2 x 8	230	GU10
COM1L2O02	Comète on rounded profile 2L	Brushed nickel	2 x 8	230	GU10
COM2L2O02	Comète on rounded profile 2L	Chrome	2 x 8	230	GU10
COM002O02	Comète on rounded profile 2L	Bronze	2 x 8	230	BA15d
COM102O02	Comète on rounded profile 2L	Brushed nickel	2 x 8	230	BA15d
COM202O02	Comète on rounded profile 2L	Chrome	2 x 8	230	BA15d

Contact us for:
Customization & connectivity

INDOOR I SPOT I COMETE

Authentage Catalogus 2024 Authentage Katalogus 2024 Authentage Catalogue 2024 Authentage Katalog 2024 Authentage Verlichting Authentage Lighting Authentage éclairage Authentage Beleuchtung
Authentage Webshop Authentage Verlichting Authentage Armaturen Authentage Winkels Authentage Verkooppunten Authentage Verdelers Authentage Verdeelpunten Authentage België Authentage Nederland Authentage Vente en Ligne Authentage Boutique Vente en Ligne Authentage Luminaires Authentage éclairage
Authentage Revendeurs Authentage Points de vente Authentage Magasins Authentage Boutiques Authentage Points de distribution Authentage France Authentage Lighting Authentage Retailers Authentage Dealers Authentage Distributors Authentage Points of sale Authentage Resellers Authentage England
Authentage Beleuchtung Authent Beleuchtung Authentage Leuchten Authentage Händler Authentage Shops Authentage Verkaufsstellen Authentage Vertriebspartner Authentage Deutschland Authentage E-shop Authentage Geschäfte Authentage Vertriebsstellen

www.Bcosy.be - Waarschoot - België - Belgique - Belgium - Belgien tel 0032 (0) 9 378 24 30 Mail: info@bcosy.be

COMETE ON SQUARE BASE

SPOT

IP 20 | DALI | DI

Available in 2 versions: GU10 (no driver required) or BA15d (driver required & included).
Lamps not included, consult light source guide for our advice.



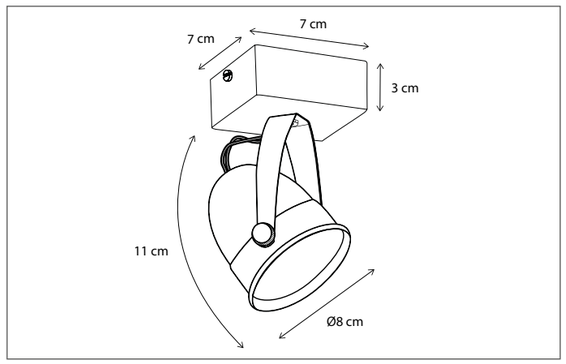

CODE	TYPE	FINISH	WATT	VOLT	FITTING
COM0L1V70	Comète on square base	Bronze	8	230	GU10
COM1L1V70	Comète on square base	Brushed nickel	8	230	GU10
COM2L1V70	Comète on square base	Chrome	8	230	GU10
COM001V70	Comète on square base	Bronze	8	230	BA15d
COM101V70	Comète on square base	Brushed nickel	8	230	BA15d
COM201V70	Comète on square base	Chrome	8	230	BA15d

Contact us for:
Customization & connectivity

COMETE ON SQUARE BASE LARGE

SPOT

IP 20 | DALI | DI

Available in 2 versions: GU10 (no driver required) or BA15d (driver required & included).
Lamps not included, consult light source guide for our advice.

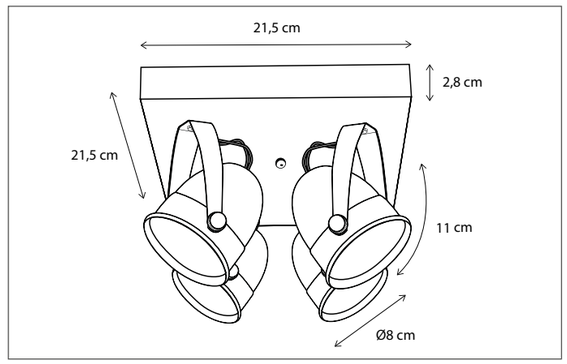



CODE	TYPE	FINISH	WATT	VOLT	FITTING
COM0L4V21	Comète on square base 4L	Bronze	4 x 8	230	GU10
COM1L4V21	Comète on square base 4L	Brushed nickel	4 x 8	230	GU10
COM2L4V21	Comète on square base 4L	Chrome	4 x 8	230	GU10
COM004V21	Comète on square base 4L	Bronze	4 x 8	230	BA15d
COM104V21	Comète on square base 4L	Brushed nickel	4 x 8	230	BA15d
COM204V21	Comète on square base 4L	Chrome	4 x 8	230	BA15d

Contact us for:
Customization & connectivity

INDOOR I SPOT I COMETE

Authentage Catalogus 2024 Authentage Katalogus 2024 Authentage Catalogue 2024 Authentage Katalog 2024 Authentage Verlichting Authentage Lighting Authentage éclairage Authentage Beleuchtung
Authentage Webshop Authentage Verlichting Authentage Armaturen Authentage Winkels Authentage Verkooppunten Authentage Verdelers Authentage Verdeelpunten Authentage België Authentage Nederland Authentage Vente en Ligne Authentage Boutique Vente en Ligne Authentage Luminaires Authentage éclairage
Authentage Revendeurs Authentage Points de vente Authentage Magasins Authentage Boutiques Authentage Points de distribution Authentage France Authentage Lighting Authentage Retailers Authentage Dealers Authentage Distributors Authentage Points of sale Authentage Resellers Authentage England
Authentage Beleuchtung Authent Beleuchtung Authentage Leuchten Authentage Händler Authentage Shops Authentage Verkaufsstellen Authentage Vertriebspartner Authentage Deutschland Authentage E-shop Authentage Geschäfte Authentage Vertriebsstellen

www.Bcosy.be - Waarschoot - België - Belgique - Belgium - Belgien tel 0032 (0) 9 378 24 30 Mail: info@bcosy.be

COMETE ON ROUND PLATE LARGE

SPOT

IP 20 | .m | DALI | DI

Available in 2 versions: GU10 (no driver required) or BA15d (driver required & included).
Lamps not included, consult light source guide for our advice.



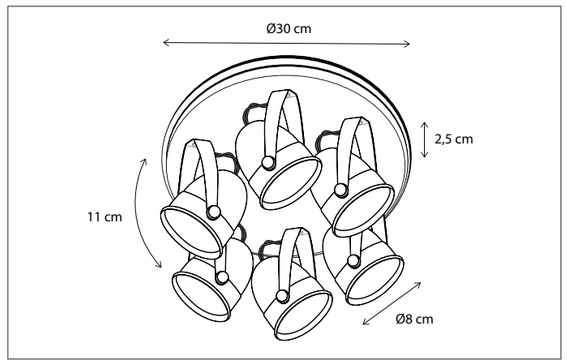

CODE	TYPE	FINISH	WATT	VOLT	FITTING
COM0L3R30	Comète on round plate 3L	Bronze	3 x 8	230	GU10
COM0L6R30	Comète on round plate 6L	Bronze	6 x 8	230	GU10
COM1L3R30	Comète on round plate 3L	Brushed nickel	3 x 8	230	GU10
COM1L6R30	Comète on round plate 6L	Brushed nickel	6 x 8	230	GU10
COM2L3R30	Comète on round plate 3L	Chrome	3 x 8	230	GU10
COM2L6R30	Comète on round plate 6L	Chrome	6 x 8	230	GU10
COM003R30	Comète on round plate 3L	Bronze	3 x 8	230	BA15d
COM006R30	Comète on round plate 6L	Bronze	6 x 8	230	BA15d
COM103R30	Comète on round plate 3L	Brushed nickel	3 x 8	230	BA15d
COM106R30	Comète on round plate 6L	Brushed nickel	6 x 8	230	BA15d
COM203R30	Comète on round plate 3L	Chrome	3 x 8	230	BA15d
COM206R30	Comète on round plate 6L	Chrome	6 x 8	230	BA15d

Contact us for:
Customization & connectivity

COMETE M10

SPOT

III | F

Available in 2 versions: GU10 (no driver required) or BA15d (driver required).
For BA15d, select the correct driver p486 accessories.
Lamps not included, consult light source guide for our advice.

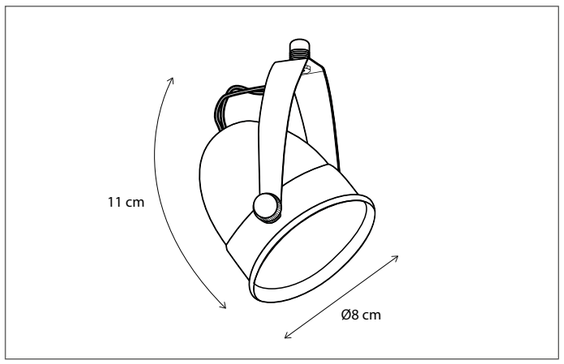



CODE	TYPE	FINISH	WATT	VOLT	FITTING
COM0L1M01	Comète M10	Bronze	8	230	GU10
COM1L1M01	Comète M10	Brushed nickel	8	230	GU10
COM2L1M01	Comète M10	Chrome	8	230	GU10
COM001M01	Comète M10	Bronze	8	12	BA15d
COM101M01	Comète M10	Brushed nickel	8	12	BA15d
COM201M01	Comète M10	Chrome	8	12	BA15d

Contact us for:
Customization & connectivity

INDOOR I SPOT I COMETE

Authentage Catalogus 2024 Authentage Katalogus 2024 Authentage Catalogue 2024 Authentage Katalog 2024 Authentage Verlichting Authentage Lighting Authentage éclairage Authentage Beleuchtung
Authentage Webshop Authentage Verlichting Authentage Armaturen Authentage Winkels Authentage Verkooppunten Authentage Verdelers Authentage Verdeelpunten Authentage België Authentage Nederland Authentage Vente en Ligne Authentage Boutique Vente en Ligne Authentage Luminaires Authentage éclairage
Authentage Revendeurs Authentage Points de vente Authentage Magasins Authentage Boutiques Authentage Points de distribution Authentage France Authentage Lighting Authentage Retailers Authentage Dealers Authentage Distributors Authentage Points of sale Authentage Resellers Authentage England
Authentage Beleuchtung Authent Beleuchtung Authentage Leuchten Authentage Händler Authentage Shops Authentage Verkaufsstellen Authentage Vertriebspartner Authentage Deutschland Authentage E-shop Authentage Geschäfte Authentage Vertriebsstellen

www.Bcosy.be - Waarschoot - België - Belgique - Belgium - Belgien tel 0032 (0) 9 378 24 30 Mail: info@bcosy.be

COMETE
ON PROFILE

SPOT

IP 20

Available in 2 versions: GU10 (no driver required) or BA15d (driver required & included).

Customise your product, choose the length of the profile and number of spots.

Lamps not included, consult light source guide for our advice.



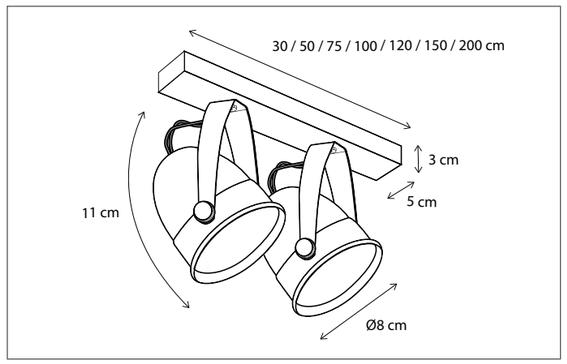

CODE	TYPE	FINISH	WATT	VOLT	FITTING
COM0L2B03	Comète on profile 30 cm - 2L	Bronze	2 x 8	230	GU10
COM0L3B05	Comète on profile 50 cm - 3L	Bronze	3 x 8	230	GU10
COM0L4B07	Comète on profile 75 cm - 4L	Bronze	4 x 8	230	GU10
COM0L4B10	Comète on profile 100 cm - 4L	Bronze	4 x 8	230	GU10
COM0L4B12	Comète on profile 120 cm - 4L	Bronze	4 x 8	230	GU10
COM0L4B15	Comète on profile 150 cm - 4L	Bronze	4 x 8	230	GU10
COM0L4B20	Comète on profile 200 cm - 4L	Bronze	4 x 8	230	GU10
COM0L1XTR	Comète extra mounted on profile	Bronze	8	230	GU10
COM1L2B03	Comète on profile 30 cm - 2L	Brushed nickel	2 x 8	230	GU10
COM1L3B05	Comète on profile 50 cm - 3L	Brushed nickel	3 x 8	230	GU10
COM1L4B07	Comète on profile 75 cm - 4L	Brushed nickel	4 x 8	230	GU10
COM1L4B10	Comète on profile 100 cm - 4L	Brushed nickel	4 x 8	230	GU10
COM1L4B12	Comète on profile 120 cm - 4L	Brushed nickel	4 x 8	230	GU10
COM1L4B15	Comète on profile 150 cm - 4L	Brushed nickel	4 x 8	230	GU10

Contact us for:

Customization & connectivity

COMETE
ON PROFILE

SPOT

CODE	TYPE	FINISH	WATT	VOLT	FITTING
COM1L4B20	Comète on profile 200 cm - 4L	Brushed nickel	4 x 8	230	GU10
COM1L1XTR	Comète extra mounted on profile	Brushed nickel	8	230	GU10
COM2L2B03	Comète on profile 30 cm - 2L	Chrome	2 x 8	230	GU10
COM2L3B05	Comète on profile 50 cm - 3L	Chrome	3 x 8	230	GU10
COM2L4B07	Comète on profile 75 cm - 4L	Chrome	4 x 8	230	GU10
COM2L4B10	Comète on profile 100 cm - 4L	Chrome	4 x 8	230	GU10
COM2L4B12	Comète on profile 120 cm - 4L	Chrome	4 x 8	230	GU10
COM2L4B15	Comète on profile 150 cm - 4L	Chrome	4 x 8	230	GU10
COM2L4B20	Comète on profile 200 cm - 4L	Chrome	4 x 8	230	GU10
COM2L1XTR	Comète extra mounted on profile	Chrome	8	230	GU10
COM002B03	Comète on profile 30 cm - 2L	Bronze	2 x 8	230	BA15d
COM003B05	Comète on profile 50 cm - 3L	Bronze	3 x 8	230	BA15d
COM004B07	Comète on profile 75 cm - 4L	Bronze	4 x 8	230	BA15d
COM004B10	Comète on profile 100 cm - 4L	Bronze	4 x 8	230	BA15d
COM004B12	Comète on profile 120 cm - 4L	Bronze	4 x 8	230	BA15d
COM004B15	Comète on profile 150 cm - 4L	Bronze	4 x 8	230	BA15d
COM004B20	Comète on profile 200 cm - 4L	Bronze	4 x 8	230	BA15d
COM001XTR	Comète extra mounted on profile	Bronze	8	230	BA15d
COM102B03	Comète on profile 30 cm - 2L	Brushed nickel	2 x 8	230	BA15d
COM103B05	Comète on profile 50 cm - 3L	Brushed nickel	3 x 8	230	BA15d
COM104B07	Comète on profile 75 cm - 4L	Brushed nickel	4 x 8	230	BA15d
COM104B10	Comète on profile 100 cm - 4L	Brushed nickel	4 x 8	230	BA15d
COM104B12	Comète on profile 120 cm - 4L	Brushed nickel	4 x 8	230	BA15d
COM104B15	Comète on profile 150 cm - 4L	Brushed nickel	4 x 8	230	BA15d
COM104B20	Comète on profile 200 cm - 4L	Brushed nickel	4 x 8	230	BA15d
COM101XTR	Comète extra mounted on profile	Brushed nickel	8	230	BA15d
COM202B03	Comète on profile 30 cm - 2L	Chrome	2 x 8	230	BA15d
COM203B05	Comète on profile 50 cm - 3L	Chrome	3 x 8	230	BA15d
COM204B07	Comète on profile 75 cm - 4L	Chrome	4 x 8	230	BA15d
COM204B10	Comète on profile 100 cm - 4L	Chrome	4 x 8	230	BA15d
COM204B12	Comète on profile 120 cm - 4L	Chrome	4 x 8	230	BA15d
COM204B15	Comète on profile 150 cm - 4L	Chrome	4 x 8	230	BA15d
COM204B20	Comète on profile 200 cm - 4L	Chrome	4 x 8	230	BA15d
COM201XTR	Comète extra mounted on profile	Chrome	8	230	BA15d

Contact us for:

Customization & connectivity

Authentage Catalogus 2024 Authentage Katalogus 2024 Authentage Catalogue 2024 Authentage Katalog 2024 Authentage Verlichting Authentage Lighting Authentage éclairage Authentage Beleuchtung
Authentage Webshop Authentage Verlichting Authentage Armaturen Authentage Winkels Authentage Verkooppunten Authentage Verdelers Authentage Verdeelpunten Authentage België Authentage Nederland Authentage Vente en Ligne Authentage Boutique Vente en Ligne Authentage Luminaires Authentage éclairage
Authentage Revendeurs Authentage Points de vente Authentage Magasins Authentage Boutiques Authentage Points de distribution Authentage France Authentage Lighting Authentage Retailers Authentage Dealers Authentage Distributors Authentage Points of sale Authentage Resellers Authentage England
Authentage Beleuchtung Authent Beleuchtung Authentage Leuchten Authentage Händler Authentage Shops Authentage Verkaufsstellen Authentage Vertriebspartner Authentage Deutschland Authentage E-shop Authentage Geschäfte Authentage Vertriebsstellen

www.Bcosy.be - Waarschoot - België - Belgique - Belgium - Belgien tel 0032 (0) 9 378 24 30 Mail: info@bcosy.be

POIRE DISC WITH SPRINGS

SPOT

Available in 2 versions: GU10 (no driver required) or BA15d (driver required).
For BA15d, select the correct driver p486 accessories.
Lamps not included, consult light source guide for our advice.



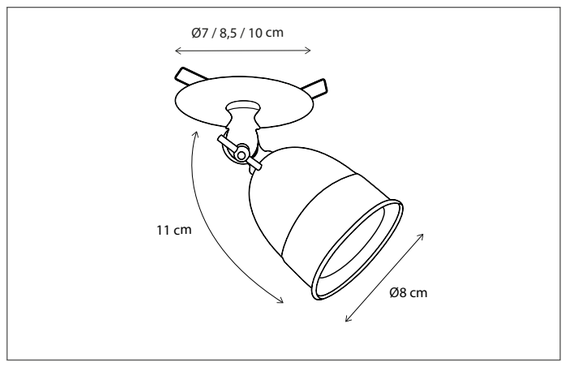

CODE	TYPE	FINISH	WATT	VOLT	FITTING
POI0L1I70	Poire disc with springs 7 cm	Bronze	8	230	GU10
POI0L1I85	Poire disc with springs 8,5 cm	Bronze	8	230	GU10
POI0L1I10	Poire disc with springs 10 cm	Bronze	8	230	GU10
POI1L1I70	Poire disc with springs 7 cm	Brushed nickel	8	230	GU10
POI1L1I85	Poire disc with springs 8,5 cm	Brushed nickel	8	230	GU10
POI1L1I10	Poire disc with springs 10 cm	Brushed nickel	8	230	GU10
POI2L1I70	Poire disc with springs 7 cm	Chrome	8	230	GU10
POI2L1I85	Poire disc with springs 8,5 cm	Chrome	8	230	GU10
POI2L1I10	Poire disc with springs 10 cm	Chrome	8	230	GU10

Contact us for:
Customization & connectivity

POIRE DISC WITH SPRINGS

SPOT

CODE	TYPE	FINISH	WATT	VOLT	FITTING
POI001I70	Poire disc with springs 7 cm	Bronze	8	12	BA15d
POI001I85	Poire disc with springs 8,5 cm	Bronze	8	12	BA15d
POI001I10	Poire disc with springs 10 cm	Bronze	8	12	BA15d
POI101I70	Poire disc with springs 7 cm	Brushed nickel	8	12	BA15d
POI101I85	Poire disc with springs 8,5 cm	Brushed nickel	8	12	BA15d
POI101I10	Poire disc with springs 10 cm	Brushed nickel	8	12	BA15d
POI201I70	Poire disc with springs 7 cm	Chrome	8	12	BA15d
POI201I85	Poire disc with springs 8,5 cm	Chrome	8	12	BA15d
POI201I10	Poire disc with springs 10 cm	Chrome	8	12	BA15d

Contact us for:
Customization & connectivity

INDOOR I SPOT I POIRE

Authentage Catalogus 2024 Authentage Katalogus 2024 Authentage Catalogue 2024 Authentage Katalog 2024 Authentage Verlichting Authentage Lighting Authentage éclairage Authentage Beleuchtung
Authentage Webshop Authentage Verlichting Authentage Armaturen Authentage Winkels Authentage Verkooppunten Authentage Verdelers Authentage Verdeelpunten Authentage België Authentage Nederland Authentage Vente en Ligne Authentage Boutique Vente en Ligne Authentage Luminaires Authentage éclairage
Authentage Revendeurs Authentage Points de vente Authentage Magasins Authentage Boutiques Authentage Points de distribution Authentage France Authentage Lighting Authentage Retailers Authentage Dealers Authentage Distributors Authentage Points of sale Authentage Resellers Authentage England
Authentage Beleuchtung Authent Beleuchtung Authentage Leuchten Authentage Händler Authentage Shops Authentage Verkaufsstellen Authentage Vertriebspartner Authentage Deutschland Authentage E-shop Authentage Geschäfte Authentage Vertriebsstellen

www.Bcosy.be - Waarschoot - België - Belgique - Belgium - Belgien tel 0032 (0) 9 378 24 30 Mail: info@bcosy.be

POIRE ROSAS WITH SPRINGS

SPOT

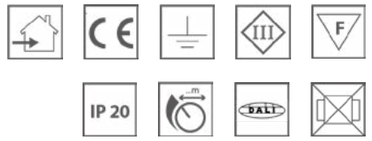

Available in 2 versions: GU10 (no driver required) or BA15d (driver required).
For BA15d, select the correct driver p486 accessories.
Lamps not included, consult light source guide for our advice.



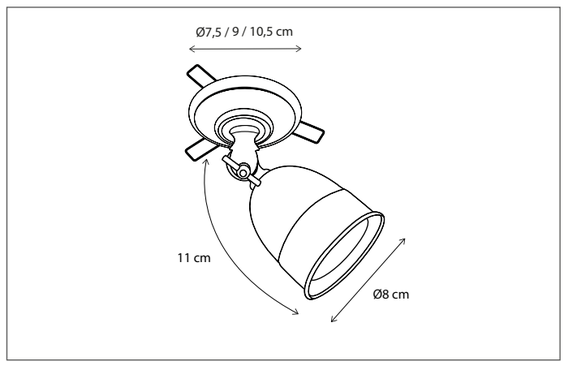

CODE	TYPE	FINISH	WATT	VOLT	FITTING
POI0L1J75	Poire rosas with springs 7,5 cm	Bronze	8	230	GU10
POI0L1J90	Poire rosas with springs 9 cm	Bronze	8	230	GU10
POI0L1J10	Poire rosas with springs 10,5 cm	Bronze	8	230	GU10
POI1L1J75	Poire rosas with springs 7,5 cm	Brushed nickel	8	230	GU10
POI1L1J90	Poire rosas with springs 9 cm	Brushed nickel	8	230	GU10
POI1L1J10	Poire rosas with springs 10,5 cm	Brushed nickel	8	230	GU10
POI2L1J75	Poire rosas with springs 7,5 cm	Chrome	8	230	GU10
POI2L1J90	Poire rosas with springs 9 cm	Chrome	8	230	GU10
POI2L1J10	Poire rosas with springs 10,5 cm	Chrome	8	230	GU10

Contact us for:
Customization & connectivity

POIRE ROSAS WITH SPRINGS

SPOT

CODE	TYPE	FINISH	WATT	VOLT	FITTING
POI001J75	Poire rosas with springs 7,5 cm	Bronze	8	12	BA15d
POI001J90	Poire rosas with springs 9 cm	Bronze	8	12	BA15d
POI001J10	Poire rosas with springs 10,5 cm	Bronze	8	12	BA15d
POI101J75	Poire rosas with springs 7,5 cm	Brushed nickel	8	12	BA15d
POI101J90	Poire rosas with springs 9 cm	Brushed nickel	8	12	BA15d
POI101J10	Poire rosas with springs 10,5 cm	Brushed nickel	8	12	BA15d
POI201J75	Poire rosas with springs 7,5 cm	Chrome	8	12	BA15d
POI201J90	Poire rosas with springs 9 cm	Chrome	8	12	BA15d
POI201J10	Poire rosas with springs 10,5 cm	Chrome	8	12	BA15d

Contact us for:
Customization & connectivity

INDOOR I SPOT I POIRE

Authentage Catalogus 2024 Authentage Katalogus 2024 Authentage Catalogue 2024 Authentage Katalog 2024 Authentage Verlichting Authentage Lighting Authentage éclairage Authentage Beleuchtung
Authentage Webshop Authentage Verlichting Authentage Armaturen Authentage Winkels Authentage Verkooppunten Authentage Verdelers Authentage Verdeelpunten Authentage België Authentage Nederland Authentage Vente en Ligne Authentage Boutique Vente en Ligne Authentage Luminaires Authentage éclairage
Authentage Revendeurs Authentage Points de vente Authentage Magasins Authentage Boutiques Authentage Points de distribution Authentage France Authentage Lighting Authentage Retailers Authentage Dealers Authentage Distributors Authentage Points of sale Authentage Resellers Authentage England
Authentage Beleuchtung Authent Beleuchtung Authentage Leuchten Authentage Händler Authentage Shops Authentage Verkaufsstellen Authentage Vertriebspartner Authentage Deutschland Authentage E-shop Authentage Geschäfte Authentage Vertriebsstellen

www.Bcosy.be - Waarschoot - België - Belgique - Belgium - Belgien tel 0032 (0) 9 378 24 30 Mail: info@bcosy.be

POIRE
MOUNTED BASE

SPOT

Available in 2 versions: GU10 (no driver required) or BA15d (driver required).
For BA15d, select the correct driver p486 accessories.
Lamps not included, consult light source guide for our advice.



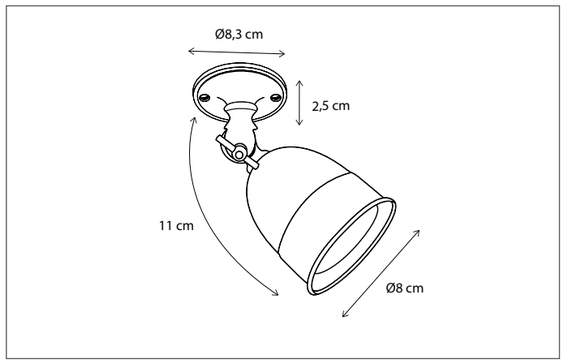

CODE	TYPE	FINISH	WATT	VOLT	FITTING
POI0L1G83	Poire mounted base	Bronze	8	230	GU10
POI1L1G83	Poire mounted base	Brushed nickel	8	230	GU10
POI2L1G83	Poire mounted base	Chrome	8	230	GU10
POI001G83	Poire mounted base	Bronze	8	12	BA15d
POI101G83	Poire mounted base	Brushed nickel	8	12	BA15d
POI201G83	Poire mounted base	Chrome	8	12	BA15d

Contact us for:
Customization & connectivity

POIRE
ON ROUND BASE

SPOT

Available in 2 versions: GU10 (no driver required) or BA15d (driver required & included).
Lamps not included, consult light source guide for our advice.

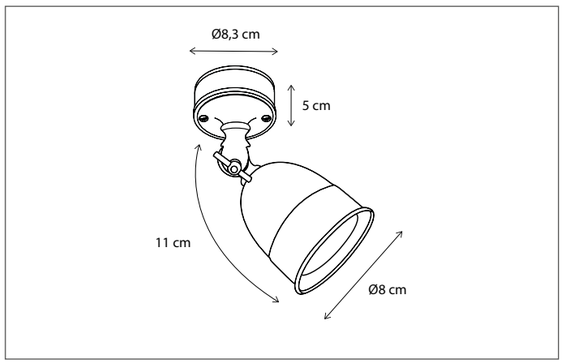



CODE	TYPE	FINISH	WATT	VOLT	FITTING
POI0L1F83	Poire on round base	Bronze	8	230	GU10
POI1L1F83	Poire on round base	Brushed nickel	8	230	GU10
POI2L1F83	Poire on round base	Chrome	8	230	GU10
POI001F83	Poire on round base	Bronze	8	230	BA15d
POI101F83	Poire on round base	Brushed nickel	8	230	BA15d
POI201F83	Poire on round base	Chrome	8	230	BA15d

Contact us for:
Customization & connectivity

INDOOR I SPOT I POIRE

Authentage Catalogus 2024 Authentage Katalogus 2024 Authentage Catalogue 2024 Authentage Katalog 2024 Authentage Verlichting Authentage Lighting Authentage éclairage Authentage Beleuchtung
Authentage Webshop Authentage Verlichting Authentage Armaturen Authentage Winkels Authentage Verkooppunten Authentage Verdelers Authentage Verdeelpunten Authentage België Authentage Nederland Authentage Vente en Ligne Authentage Boutique Vente en Ligne Authentage Luminaires Authentage éclairage
Authentage Revendeurs Authentage Points de vente Authentage Magasins Authentage Boutiques Authentage Points de distribution Authentage France Authentage Lighting Authentage Retailers Authentage Dealers Authentage Distributors Authentage Points of sale Authentage Resellers Authentage England
Authentage Beleuchtung Authent Beleuchtung Authentage Leuchten Authentage Händler Authentage Shops Authentage Verkaufsstellen Authentage Vertriebspartner Authentage Deutschland Authentage E-shop Authentage Geschäfte Authentage Vertriebsstellen

www.Bcosy.be - Waarschoot - België - Belgique - Belgium - Belgien tel 0032 (0) 9 378 24 30 Mail: info@bcosy.be

POIRE ON ROUNDED PROFILE

SPOT

IP 20 | DALI | DI

Available in 2 versions: GU10 (no driver required) or BA15d (driver required & included).
Lamps not included, consult light source guide for our advice.



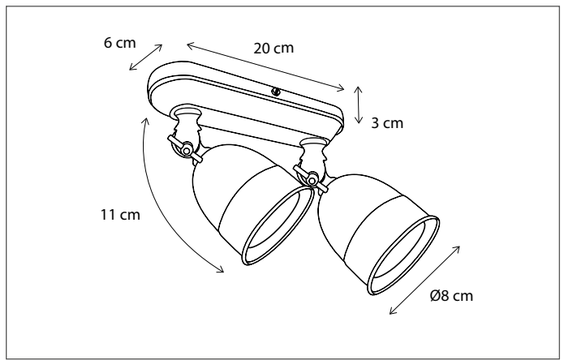

CODE	TYPE	FINISH	WATT	VOLT	FITTING
POI0L2O02	Poire on rounded profile 2L	Bronze	2 x 8	230	GU10
POI1L2O02	Poire on rounded profile 2L	Brushed nickel	2 x 8	230	GU10
POI2L2O02	Poire on rounded profile 2L	Chrome	2 x 8	230	GU10
POI002O02	Poire on rounded profile 2L	Bronze	2 x 8	230	BA15d
POI102O02	Poire on rounded profile 2L	Brushed nickel	2 x 8	230	BA15d
POI202O02	Poire on rounded profile 2L	Chrome	2 x 8	230	BA15d

Contact us for:
Customization & connectivity

POIRE ON SQUARE BASE

SPOT

IP 20 | DALI | DI

Available in 2 versions: GU10 (no driver required) or BA15d (driver required & included).
Lamps not included, consult light source guide for our advice.

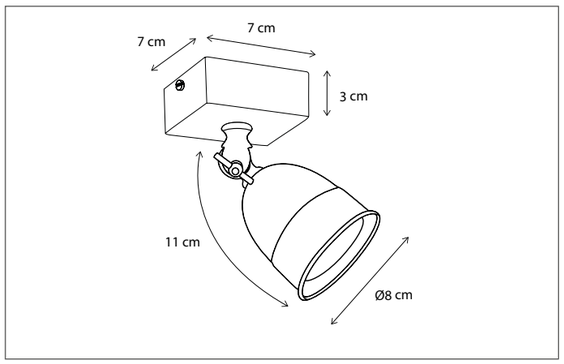



CODE	TYPE	FINISH	WATT	VOLT	FITTING
POI0L1V70	Poire on square base	Bronze	8	230	GU10
POI1L1V70	Poire on square base	Brushed nickel	8	230	GU10
POI2L1V70	Poire on square base	Chrome	8	230	GU10
POI001V70	Poire on square base	Bronze	8	230	BA15d
POI101V70	Poire on square base	Brushed nickel	8	230	BA15d
POI201V70	Poire on square base	Chrome	8	230	BA15d

Contact us for:
Customization & connectivity

INDOOR I SPOT I POIRE

Authentage Catalogus 2024 Authentage Katalogus 2024 Authentage Catalogue 2024 Authentage Katalog 2024 Authentage Verlichting Authentage Lighting Authentage éclairage Authentage Beleuchtung
Authentage Webshop Authentage Verlichting Authentage Armaturen Authentage Winkels Authentage Verkooppunten Authentage Verdelers Authentage Verdeelpunten Authentage België Authentage Nederland Authentage Vente en Ligne Authentage Boutique Vente en Ligne Authentage Luminaires Authentage éclairage
Authentage Revendeurs Authentage Points de vente Authentage Magasins Authentage Boutiques Authentage Points de distribution Authentage France Authentage Lighting Authentage Retailers Authentage Dealers Authentage Distributors Authentage Points of sale Authentage Resellers Authentage England
Authentage Beleuchtung Authent Beleuchtung Authentage Leuchten Authentage Händler Authentage Shops Authentage Verkaufsstellen Authentage Vertriebspartner Authentage Deutschland Authentage E-shop Authentage Geschäfte Authentage Vertriebsstellen

www.Bcosy.be - Waarschoot - België - Belgique - Belgium - Belgien tel 0032 (0) 9 378 24 30 Mail: info@bcosy.be

POIRE ON SQUARE BASE MEDIUM

SPOT

Available in 2 versions: GU10 (no driver required) or BA15d (driver required & included).
Lamps not included, consult light source guide for our advice.



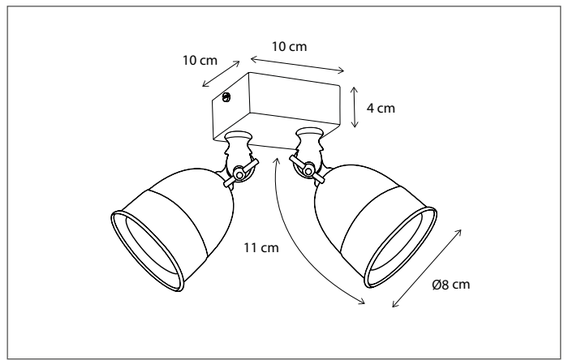

CODE	TYPE	FINISH	WATT	VOLT	FITTING
POI0L2V10	Poire on square base 2L	Bronze	2 x 8	230	GU10
POI1L2V10	Poire on square base 2L	Brushed nickel	2 x 8	230	GU10
POI2L2V10	Poire on square base 2L	Chrome	2 x 8	230	GU10
POI002V10	Poire on square base 2L	Bronze	2 x 8	230	BA15d
POI102V10	Poire on square base 2L	Brushed nickel	2 x 8	230	BA15d
POI202V10	Poire on square base 2L	Chrome	2 x 8	230	BA15d

Contact us for:
Customization & connectivity

POIRE ON SQUARE BASE LARGE

SPOT

Available in 2 versions: GU10 (no driver required) or BA15d (driver required & included).
Lamps not included, consult light source guide for our advice.

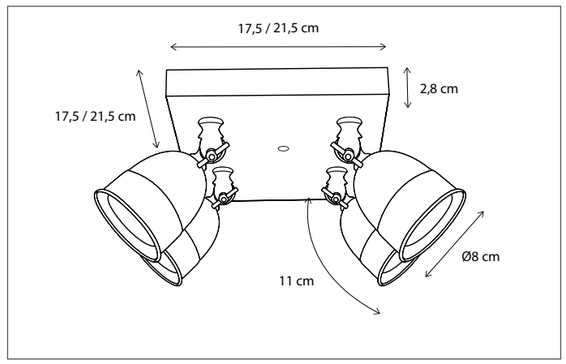



CODE	TYPE	FINISH	WATT	VOLT	FITTING
POI0L4V17	Poire on square base 4L	Bronze	4 x 8	230	GU10
POI0L6V21	Poire on square base 6L	Bronze	6 x 8	230	GU10
POI1L4V17	Poire on square base 4L	Brushed nickel	4 x 8	230	GU10
POI1L6V21	Poire on square base 6L	Brushed nickel	6 x 8	230	GU10
POI2L4V17	Poire on square base 4L	Chrome	4 x 8	230	GU10
POI2L6V21	Poire on square base 6L	Chrome	6 x 8	230	GU10
POI004V17	Poire on square base 4L	Bronze	4 x 8	230	BA15d
POI006V21	Poire on square base 6L	Bronze	6 x 8	230	BA15d
POI104V17	Poire on square base 4L	Brushed nickel	4 x 8	230	BA15d
POI106V21	Poire on square base 6L	Brushed nickel	6 x 8	230	BA15d
POI204V17	Poire on square base 4L	Chrome	4 x 8	230	BA15d
POI206V21	Poire on square base 6L	Chrome	6 x 8	230	BA15d

Contact us for:
Customization & connectivity

INDOOR I SPOT I POIRE

Authentage Catalogus 2024 Authentage Katalogus 2024 Authentage Catalogue 2024 Authentage Katalog 2024 Authentage Verlichting Authentage Lighting Authentage éclairage Authentage Beleuchtung
Authentage Webshop Authentage Verlichting Authentage Armaturen Authentage Winkels Authentage Verkooppunten Authentage Verdelers Authentage Verdeelpunten Authentage België Authentage Nederland Authentage Vente en Ligne Authentage Boutique Vente en Ligne Authentage Luminaires Authentage éclairage
Authentage Revendeurs Authentage Points de vente Authentage Magasins Authentage Boutiques Authentage Points de distribution Authentage France Authentage Lighting Authentage Retailers Authentage Dealers Authentage Distributors Authentage Points of sale Authentage Resellers Authentage England
Authentage Beleuchtung Authent Beleuchtung Authentage Leuchten Authentage Händler Authentage Shops Authentage Verkaufsstellen Authentage Vertriebspartner Authentage Deutschland Authentage E-shop Authentage Geschäfte Authentage Vertriebsstellen

www.Bcosy.be - Waarschoot - België - Belgique - Belgium - Belgien tel 0032 (0) 9 378 24 30 Mail: info@bcosy.be

POIRE ON ROUND PLATE LARGE

SPOT

IP 20 | DALI | DI

Available in 2 versions: GU10 (no driver required) or BA15d (driver required & included).
Lamps not included, consult light source guide for our advice.



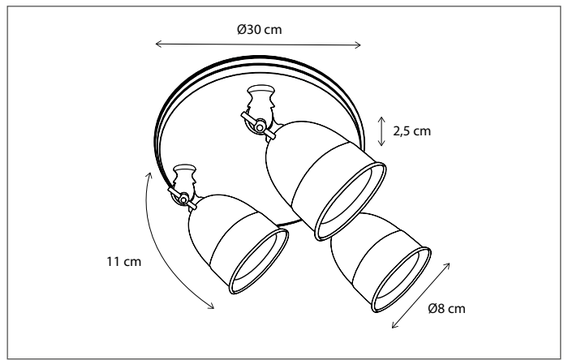

CODE	TYPE	FINISH	WATT	VOLT	FITTING
POI0L3R30	Poire on round plate 3L	Bronze	3 x 8	230	GU10
POI0L6R30	Poire on round plate 6L	Bronze	6 x 8	230	GU10
POI1L3R30	Poire on round plate 3L	Brushed nickel	3 x 8	230	GU10
POI1L6R30	Poire on round plate 6L	Brushed nickel	6 x 8	230	GU10
POI2L3R30	Poire on round plate 3L	Chrome	3 x 8	230	GU10
POI2L6R30	Poire on round plate 6L	Chrome	6 x 8	230	GU10
POI003R30	Poire on round plate 3L	Bronze	3 x 8	230	BA15d
POI006R30	Poire on round plate 6L	Bronze	6 x 8	230	BA15d
POI103R30	Poire on round plate 3L	Brushed nickel	3 x 8	230	BA15d
POI106R30	Poire on round plate 6L	Brushed nickel	6 x 8	230	BA15d
POI203R30	Poire on round plate 3L	Chrome	3 x 8	230	BA15d
POI206R30	Poire on round plate 6L	Chrome	6 x 8	230	BA15d

Contact us for:
Customization & connectivity

POIRE M10

SPOT

IP 20 | DALI

Available in 2 versions: GU10 (no driver required) or BA15d (driver required).
For BA15d, select the correct driver p486 accessories.
Lamps not included, consult light source guide for our advice.

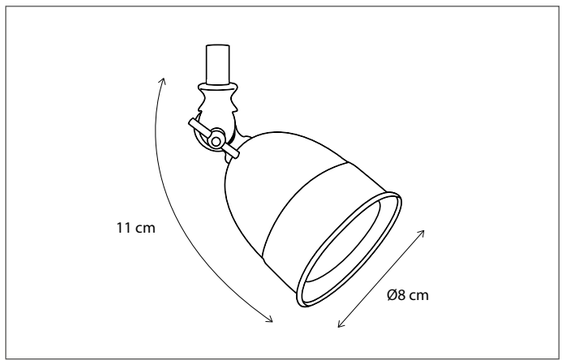



CODE	TYPE	FINISH	WATT	VOLT	FITTING
POI0L1M01	Poire M10	Bronze	8	230	GU10
POI1L1M01	Poire M10	Brushed nickel	8	230	GU10
POI2L1M01	Poire M10	Chrome	8	230	GU10
POI001M01	Poire M10	Bronze	8	12	BA15d
POI101M01	Poire M10	Brushed nickel	8	12	BA15d
POI201M01	Poire M10	Chrome	8	12	BA15d

Contact us for:
Customization & connectivity

INDOOR I SPOT I POIRE

Authentage Catalogus 2024 Authentage Katalogus 2024 Authentage Catalogue 2024 Authentage Katalog 2024 Authentage Verlichting Authentage Lighting Authentage éclairage Authentage Beleuchtung
Authentage Webshop Authentage Verlichting Authentage Armaturen Authentage Winkels Authentage Verkooppunten Authentage Verdelers Authentage Verdeelpunten Authentage België Authentage Nederland Authentage Vente en Ligne Authentage Boutique Vente en Ligne Authentage Luminaires Authentage éclairage
Authentage Revendeurs Authentage Points de vente Authentage Magasins Authentage Boutiques Authentage Points de distribution Authentage France Authentage Lighting Authentage Retailers Authentage Dealers Authentage Distributors Authentage Points of sale Authentage Resellers Authentage England
Authentage Beleuchtung Authent Beleuchtung Authentage Leuchten Authentage Händler Authentage Shops Authentage Verkaufsstellen Authentage Vertriebspartner Authentage Deutschland Authentage E-shop Authentage Geschäfte Authentage Vertriebsstellen

www.Bcosy.be - Waarschoot - België - Belgique - Belgium - Belgien tel 0032 (0) 9 378 24 30 Mail: info@bcosy.be



Available in 2 versions: GU10 (no driver required) or BA15d (driver required & included).

Customise your product, choose the length of the profile and number of spots.

Lamps not included, consult light source guide for our advice.



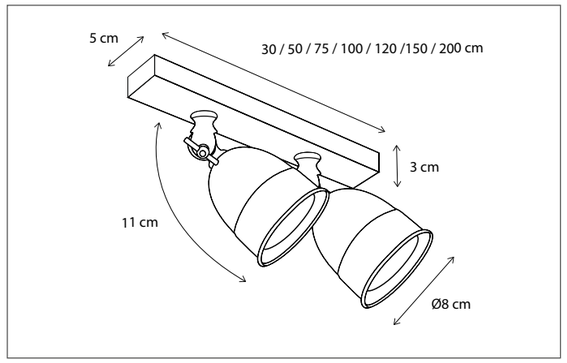

CODE	TYPE	FINISH	WATT	VOLT	FITTING
POI0L2B03	Poire on profile 30 cm - 2L	Bronze	2 x 8	230	GU10
POI0L3B05	Poire on profile 50 cm - 3L	Bronze	3 x 8	230	GU10
POI0L4B07	Poire on profile 75 cm - 4L	Bronze	4 x 8	230	GU10
POI0L4B10	Poire on profile 100 cm - 4L	Bronze	4 x 8	230	GU10
POI0L4B12	Poire on profile 120 cm - 4L	Bronze	4 x 8	230	GU10
POI0L4B15	Poire on profile 150 cm - 4L	Bronze	4 x 8	230	GU10
POI0L4B20	Poire on profile 200 cm - 4L	Bronze	4 x 8	230	GU10
POI0L1XTR	Poire extra mounted on profile	Bronze	8	230	GU10
POI1L2B03	Poire on profile 30 cm - 2L	Brushed nickel	2 x 8	230	GU10
POI1L3B05	Poire on profile 50 cm - 3L	Brushed nickel	3 x 8	230	GU10
POI1L4B07	Poire on profile 75 cm - 4L	Brushed nickel	4 x 8	230	GU10
POI1L4B10	Poire on profile 100 cm - 4L	Brushed nickel	4 x 8	230	GU10
POI1L4B12	Poire on profile 120 cm - 4L	Brushed nickel	4 x 8	230	GU10
POI1L4B15	Poire on profile 150 cm - 4L	Brushed nickel	4 x 8	230	GU10

Contact us for:

Customization & connectivity

POIRE ON PROFILE

SPOT

CODE	TYPE	FINISH	WATT	VOLT	FITTING
POI1L4B20	Poire on profile 200 cm - 4L	Brushed nickel	4 x 8	230	GU10
POI1L1XTR	Poire extra mounted on profile	Brushed nickel	8	230	GU10
POI2L2B03	Poire on profile 30 cm - 2L	Chrome	2 x 8	230	GU10
POI2L3B05	Poire on profile 50 cm - 3L	Chrome	3 x 8	230	GU10
POI2L4B07	Poire on profile 75 cm - 4L	Chrome	4 x 8	230	GU10
POI2L4B10	Poire on profile 100 cm - 4L	Chrome	4 x 8	230	GU10
POI2L4B12	Poire on profile 120 cm - 4L	Chrome	4 x 8	230	GU10
POI2L4B15	Poire on profile 150 cm - 4L	Chrome	4 x 8	230	GU10
POI2L4B20	Poire on profile 200 cm - 4L	Chrome	4 x 8	230	GU10
POI2L1XTR	Poire extra mounted on profile	Chrome	8	230	GU10
POI002B03	Poire on profile 30 cm - 2L	Bronze	2 x 8	230	BA15d
POI003B05	Poire on profile 50 cm - 3L	Bronze	3 x 8	230	BA15d
POI004B07	Poire on profile 75 cm - 4L	Bronze	4 x 8	230	BA15d
POI004B10	Poire on profile 100 cm - 4L	Bronze	4 x 8	230	BA15d
POI004B12	Poire on profile 120 cm - 4L	Bronze	4 x 8	230	BA15d
POI004B15	Poire on profile 150 cm - 4L	Bronze	4 x 8	230	BA15d
POI004B20	Poire on profile 200 cm - 4L	Bronze	4 x 8	230	BA15d
POI001XTR	Poire extra mounted on profile	Bronze	8	230	BA15d
POI102B03	Poire on profile 30 cm - 2L	Brushed nickel	2 x 8	230	BA15d
POI103B05	Poire on profile 50 cm - 3L	Brushed nickel	3 x 8	230	BA15d
POI104B07	Poire on profile 75 cm - 4L	Brushed nickel	4 x 8	230	BA15d
POI104B10	Poire on profile 100 cm - 4L	Brushed nickel	4 x 8	230	BA15d
POI104B12	Poire on profile 120 cm - 4L	Brushed nickel	4 x 8	230	BA15d
POI104B15	Poire on profile 150 cm - 4L	Brushed nickel	4 x 8	230	BA15d
POI104B20	Poire on profile 200 cm - 4L	Brushed nickel	4 x 8	230	BA15d
POI101XTR	Poire extra mounted on profile	Brushed nickel	8	230	BA15d
POI202B03	Poire on profile 30 cm - 2L	Chrome	2 x 8	230	BA15d
POI203B05	Poire on profile 50 cm - 3L	Chrome	3 x 8	230	BA15d
POI204B07	Poire on profile 75 cm - 4L	Chrome	4 x 8	230	BA15d
POI204B10	Poire on profile 100 cm - 4L	Chrome	4 x 8	230	BA15d
POI204B12	Poire on profile 120 cm - 4L	Chrome	4 x 8	230	BA15d
POI204B15	Poire on profile 150 cm - 4L	Chrome	4 x 8	230	BA15d
POI204B20	Poire on profile 200 cm - 4L	Chrome	4 x 8	230	BA15d
POI201XTR	Poire extra mounted on profile	Chrome	8	230	BA15d

Contact us for:

Customization & connectivity

INDOOR I SPOT I POIRE

Authentage Catalogus 2024 Authentage Katalogus 2024 Authentage Catalogue 2024 Authentage Katalog 2024 Authentage Verlichting Authentage Lighting Authentage éclairage Authentage Beleuchtung
Authentage Webshop Authentage Verlichting Authentage Armaturen Authentage Winkels Authentage Verkooppunten Authentage Verdelers Authentage Verdeelpunten Authentage België Authentage Nederland Authentage Vente en Ligne Authentage Boutique Vente en Ligne Authentage Luminaires Authentage éclairage
Authentage Revendeurs Authentage Points de vente Authentage Magasins Authentage Boutiques Authentage Points de distribution Authentage France Authentage Lighting Authentage Retailers Authentage Dealers Authentage Distributors Authentage Points of sale Authentage Resellers Authentage England
Authentage Beleuchtung Authent Beleuchtung Authentage Leuchten Authentage Händler Authentage Shops Authentage Verkaufsstellen Authentage Vertriebspartner Authentage Deutschland Authentage E-shop Authentage Geschäfte Authentage Vertriebsstellen

www.Bcosy.be - Waarschoot - België - Belgique - Belgium - Belgien tel 0032 (0) 9 378 24 30 Mail: info@bcosy.be

FLEURE DISC WITH SPRING

SPOT

Select the correct driver, see p486 accessories.
Lamps not included, consult light source guide for our advice.



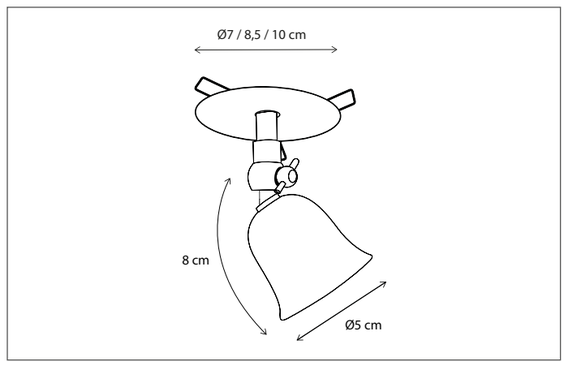

CODE	TYPE	FINISH	WATT	VOLT	FITTING
FLE0L1I70	Fleure disc with springs 7 cm	Bronze	5	12	G4
FLE0L1I85	Fleure disc with springs 8,5 cm	Bronze	5	12	G4
FLE0L1I10	Fleure disc with springs 10 cm	Bronze	5	12	G4
FLE1L1I70	Fleure disc with springs 7 cm	Brushed nickel	5	12	G4
FLE1L1I85	Fleure disc with springs 8,5 cm	Brushed nickel	5	12	G4
FLE1L1I10	Fleure disc with springs 10 cm	Brushed nickel	5	12	G4
FLE2L1I70	Fleure disc with springs 7 cm	Chrome	5	12	G4
FLE2L1I85	Fleure disc with springs 8,5 cm	Chrome	5	12	G4
FLE2L1I10	Fleure disc with springs 10 cm	Chrome	5	12	G4

Contact us for:
Customization & connectivity

FLEURE ROSAS WITH SPRING

SPOT

Select the correct driver, see p486 accessories.
Lamps not included, consult light source guide for our advice.

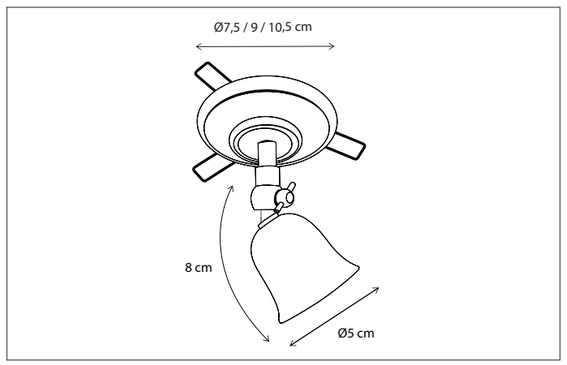



CODE	TYPE	FINISH	WATT	VOLT	FITTING
FLE0L1J75	Fleure rosas with springs 7,5 cm	Bronze	5	12	G4
FLE0L1J90	Fleure rosas with springs 9 cm	Bronze	5	12	G4
FLE0L1J10	Fleure rosas with springs 10,5 cm	Bronze	5	12	G4
FLE1L1J75	Fleure rosas with springs 7,5 cm	Brushed nickel	5	12	G4
FLE1L1J90	Fleure rosas with springs 9 cm	Brushed nickel	5	12	G4
FLE1L1J10	Fleure rosas with springs 10,5 cm	Brushed nickel	5	12	G4
FLE2L1J75	Fleure rosas with springs 7,5 cm	Chrome	5	12	G4
FLE2L1J90	Fleure rosas with springs 9 cm	Chrome	5	12	G4
FLE2L1J10	Fleure rosas with springs 10,5 cm	Chrome	5	12	G4

Contact us for:
Customization & connectivity

INDOOR I SPOT I FLEURE

Authentage Catalogus 2024 Authentage Katalogus 2024 Authentage Catalogue 2024 Authentage Katalog 2024 Authentage Verlichting Authentage Lighting Authentage éclairage Authentage Beleuchtung
Authentage Webshop Authentage Verlichting Authentage Armaturen Authentage Winkels Authentage Verkooppunten Authentage Verdelers Authentage Verdeelpunten Authentage België Authentage Nederland Authentage Vente en Ligne Authentage Boutique Vente en Ligne Authentage Luminaires Authentage éclairage
Authentage Revendeurs Authentage Points de vente Authentage Magasins Authentage Boutiques Authentage Points de distribution Authentage France Authentage Lighting Authentage Retailers Authentage Dealers Authentage Distributors Authentage Points of sale Authentage Resellers Authentage England
Authentage Beleuchtung Authent Beleuchtung Authentage Leuchten Authentage Händler Authentage Shops Authentage Verkaufsstellen Authentage Vertriebspartner Authentage Deutschland Authentage E-shop Authentage Geschäfte Authentage Vertriebsstellen

www.Bcosy.be - Waarschoot - België - Belgique - Belgium - Belgien tel 0032 (0) 9 378 24 30 Mail: info@bcosy.be

FLEURE MOUNTED BASE

SPOT

Select the correct driver, see p486 accessories.
Lamps not included, consult light source guide for our advice.



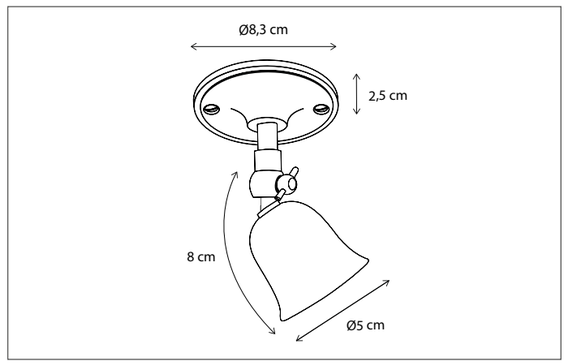

CODE	TYPE	FINISH	WATT	VOLT	FITTING
FLE0L1G83	Fleure mounted base	Bronze	5	12	G4
FLE1L1G83	Fleure mounted base	Brushed nickel	5	12	G4
FLE2L1G83	Fleure mounted base	Chrome	5	12	G4

Contact us for:
Customization & connectivity

FLEURE ON ROUND BASE

SPOT

Lamps not included, consult light source guide for our advice.

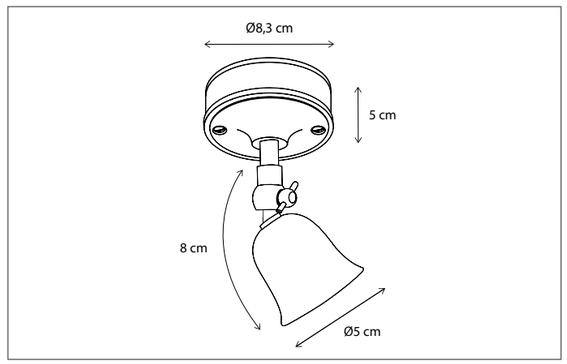



CODE	TYPE	FINISH	WATT	VOLT	FITTING
FLE0L1F83	Fleure on round base	Bronze	5	230	G4
FLE1L1F83	Fleure on round base	Brushed nickel	5	230	G4
FLE2L1F83	Fleure on round base	Chrome	5	230	G4

Contact us for:
Customization & connectivity

INDOOR I SPOT I FLEURE

Authentage Catalogus 2024 Authentage Katalogus 2024 Authentage Catalogue 2024 Authentage Katalog 2024 Authentage Verlichting Authentage Lighting Authentage éclairage Authentage Beleuchtung
Authentage Webshop Authentage Verlichting Authentage Armaturen Authentage Winkels Authentage Verkooppunten Authentage Verdelers Authentage Verdeelpunten Authentage België Authentage Nederland Authentage Vente en Ligne Authentage Boutique Vente en Ligne Authentage Luminaires Authentage éclairage
Authentage Revendeurs Authentage Points de vente Authentage Magasins Authentage Boutiques Authentage Points de distribution Authentage France Authentage Lighting Authentage Retailers Authentage Dealers Authentage Distributors Authentage Points of sale Authentage Resellers Authentage England
Authentage Beleuchtung Authent Beleuchtung Authentage Leuchten Authentage Händler Authentage Shops Authentage Verkaufsstellen Authentage Vertriebspartner Authentage Deutschland Authentage E-shop Authentage Geschäfte Authentage Vertriebsstellen

www.Bcosy.be - Waarschoot - België - Belgique - Belgium - Belgien tel 0032 (0) 9 378 24 30 Mail: info@bcosy.be

FLEURE ON ROUNDED PROFILE

SPOT

IP 20

Lamps not included, consult light source guide for our advice.



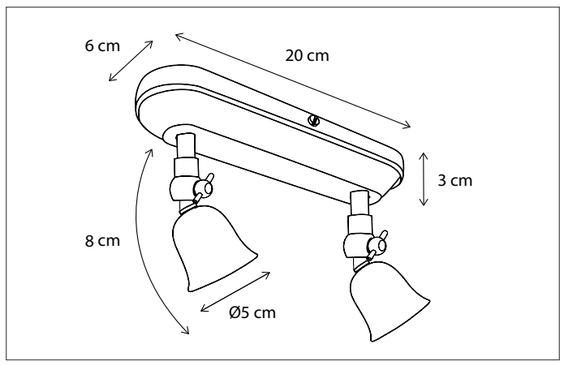

CODE	TYPE	FINISH	WATT	VOLT	FITTING
FLE0L2O02	Fleure on rounded profile 2L	Bronze	2 x 5	230	G4
FLE1L2O02	Fleure on rounded profile 2L	Brushed nickel	2 x 5	230	G4
FLE2L2O02	Fleure on rounded profile 2L	Chrome	2 x 5	230	G4

Contact us for:
Customization & connectivity

FLEURE ON SQUARE BASE

SPOT

IP 20

Lamps not included, consult light source guide for our advice.

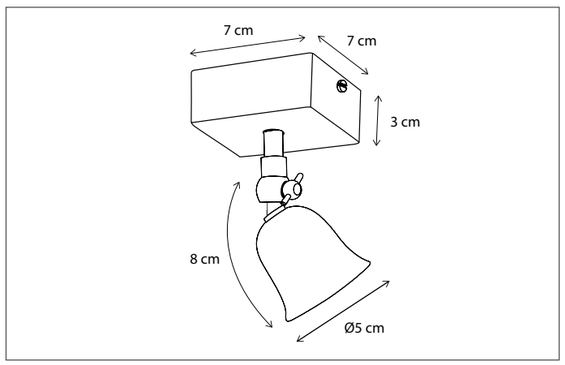



CODE	TYPE	FINISH	WATT	VOLT	FITTING
FLE0L1V70	Fleure on square base	Bronze	5	230	G4
FLE1L1V70	Fleure on square base	Brushed nickel	5	230	G4
FLE2L1V70	Fleure on square base	Chrome	5	230	G4

Contact us for:
Customization & connectivity

INDOOR I SPOT I FLEURE

Authentage Catalogus 2024 Authentage Katalogus 2024 Authentage Catalogue 2024 Authentage Katalog 2024 Authentage Verlichting Authentage Lighting Authentage éclairage Authentage Beleuchtung
Authentage Webshop Authentage Verlichting Authentage Armaturen Authentage Winkels Authentage Verkooppunten Authentage Verdelers Authentage Verdeelpunten Authentage België Authentage Nederland Authentage Vente en Ligne Authentage Boutique Vente en Ligne Authentage Luminaires Authentage éclairage
Authentage Revendeurs Authentage Points de vente Authentage Magasins Authentage Boutiques Authentage Points de distribution Authentage France Authentage Lighting Authentage Retailers Authentage Dealers Authentage Distributors Authentage Points of sale Authentage Resellers Authentage England
Authentage Beleuchtung Authent Beleuchtung Authentage Leuchten Authentage Händler Authentage Shops Authentage Verkaufsstellen Authentage Vertriebspartner Authentage Deutschland Authentage E-shop Authentage Geschäfte Authentage Vertriebsstellen

www.Bcosy.be - Waarschoot - België - Belgique - Belgium - Belgien tel 0032 (0) 9 378 24 30 Mail: info@bcosy.be

FLEURE ON SQUARE BASE MEDIUM

SPOT

IP 20

Lamps not included, consult light source guide for our advice.



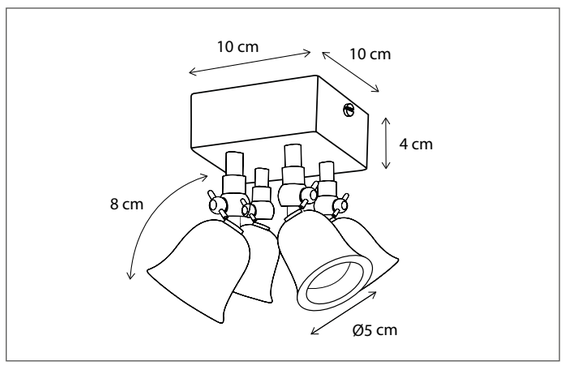

CODE	TYPE	FINISH	WATT	VOLT	FITTING
FLE0L2V10	Fleure on square base 2L	Bronze	2 x 5	230	G4
FLE0L4V10	Fleure on square base 4L	Bronze	4 x 5	230	G4
FLE1L2V10	Fleure on square base 2L	Brushed nickel	2 x 5	230	G4
FLE1L4V10	Fleure on square base 4L	Brushed nickel	4 x 5	230	G4
FLE2L2V10	Fleure on square base 2L	Chrome	2 x 5	230	G4
FLE2L4V10	Fleure on square base 4L	Chrome	4 x 5	230	G4

Contact us for:
Customization & connectivity

FLEURE ON SQUARE BASE LARGE

SPOT

IP 20

Lamps not included, consult light source guide for our advice.

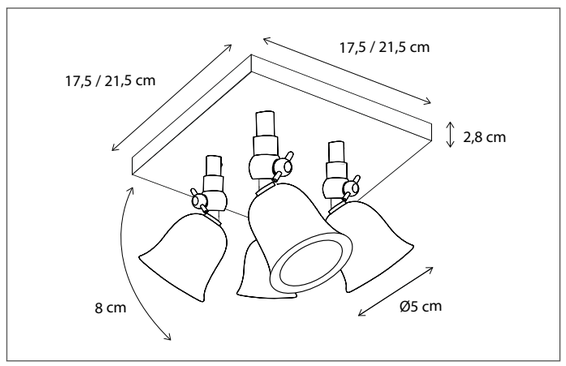



CODE	TYPE	FINISH	WATT	VOLT	FITTING
FLE0L4V17	Fleure on square base 4L	Bronze	4 x 5	230	G4
FLE0L8V21	Fleure on square base 8L	Bronze	8 x 5	230	G4
FLE1L4V17	Fleure on square base 4L	Brushed nickel	4 x 5	230	G4
FLE1L8V21	Fleure on square base 8L	Brushed nickel	8 x 5	230	G4
FLE2L4V17	Fleure on square base 4L	Chrome	4 x 5	230	G4
FLE2L8V21	Fleure on square base 8L	Chrome	8 x 5	230	G4

Contact us for:
Customization & connectivity

INDOOR I SPOT I FLEURE

Authentage Catalogus 2024 Authentage Katalogus 2024 Authentage Catalogue 2024 Authentage Katalog 2024 Authentage Verlichting Authentage Lighting Authentage éclairage Authentage Beleuchtung
Authentage Webshop Authentage Verlichting Authentage Armaturen Authentage Winkels Authentage Verkooppunten Authentage Verdelers Authentage Verdeelpunten Authentage België Authentage Nederland Authentage Vente en Ligne Authentage Boutique Vente en Ligne Authentage Luminaires Authentage éclairage
Authentage Revendeurs Authentage Points de vente Authentage Magasins Authentage Boutiques Authentage Points de distribution Authentage France Authentage Lighting Authentage Retailers Authentage Dealers Authentage Distributors Authentage Points of sale Authentage Resellers Authentage England
Authentage Beleuchtung Authent Beleuchtung Authentage Leuchten Authentage Händler Authentage Shops Authentage Verkaufsstellen Authentage Vertriebspartner Authentage Deutschland Authentage E-shop Authentage Geschäfte Authentage Vertriebsstellen

www.Bcosy.be - Waarschoot - België - Belgique - Belgium - Belgien tel 0032 (0) 9 378 24 30 Mail: info@bcosy.be

FLEURE ON ROUND PLATE LARGE

SPOT

IP 20 | DI

Lamps not included, consult light source guide for our advice.



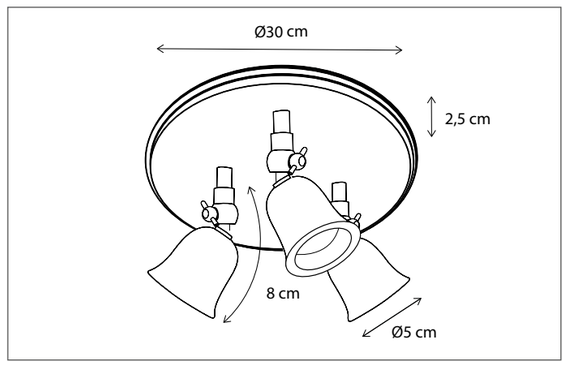

CODE	TYPE	FINISH	WATT	VOLT	FITTING
FLE0L3R30	Fleure on round plate 3L	Bronze	3 x 5	230	G4
FLE0L6R30	Fleure on round plate 6L	Bronze	6 x 5	230	G4
FLE1L3R30	Fleure on round plate 3L	Brushed nickel	3 x 5	230	G4
FLE1L6R30	Fleure on round plate 6L	Brushed nickel	6 x 5	230	G4
FLE2L3R30	Fleure on round plate 3L	Chrome	3 x 5	230	G4
FLE2L6R30	Fleure on round plate 6L	Chrome	6 x 5	230	G4

Contact us for:
Customization & connectivity

FLEURE M10

SPOT

III | IP 20

Select the correct driver, see p486 accessories.
Lamps not included, consult light source guide for our advice.

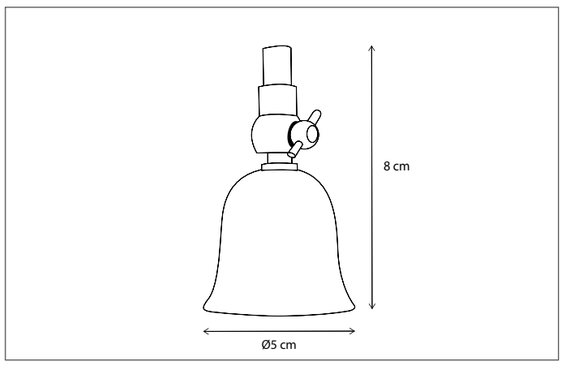



CODE	TYPE	FINISH	WATT	VOLT	FITTING
FLE0L1M01	Fleure M10	Bronze	5	12	G4
FLE1L1M01	Fleure M10	Brushed nickel	5	12	G4
FLE2L1M01	Fleure M10	Chrome	5	12	G4

Contact us for:
Customization & connectivity

INDOOR I SPOT I FLEURE

Authentage Catalogus 2024 Authentage Katalogus 2024 Authentage Catalogue 2024 Authentage Katalog 2024 Authentage Verlichting Authentage Lighting Authentage éclairage Authentage Beleuchtung
Authentage Webshop Authentage Verlichting Authentage Armaturen Authentage Winkels Authentage Verkooppunten Authentage Verdelers Authentage Verdeelpunten Authentage België Authentage Nederland Authentage Vente en Ligne Authentage Boutique Vente en Ligne Authentage Luminaires Authentage éclairage
Authentage Revendeurs Authentage Points de vente Authentage Magasins Authentage Boutiques Authentage Points de distribution Authentage France Authentage Lighting Authentage Retailers Authentage Dealers Authentage Distributors Authentage Points of sale Authentage Resellers Authentage England
Authentage Beleuchtung Authent Beleuchtung Authentage Leuchten Authentage Händler Authentage Shops Authentage Verkaufsstellen Authentage Vertriebspartner Authentage Deutschland Authentage E-shop Authentage Geschäfte Authentage Vertriebsstellen

www.Bcosy.be - Waarschoot - België - Belgique - Belgium - Belgien tel 0032 (0) 9 378 24 30 Mail: info@bcosy.be



Customise your product, choose the length of the profile and number of spots.
Lamps not included, consult light source guide for our advice.



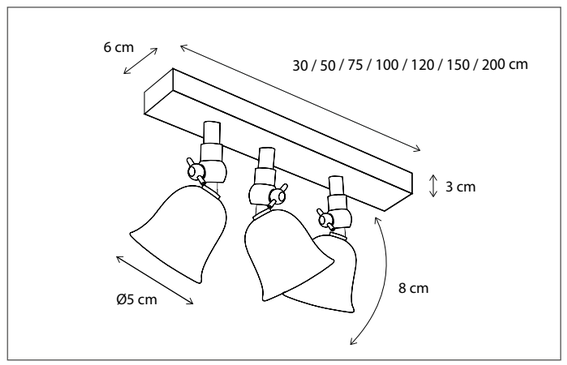

CODE	TYPE	FINISH	WATT	VOLT	FITTING
FLE0L3B03	Fleure on profile 30 cm - 3L	Bronze	3 x 5	230	G4
FLE0L5B05	Fleure on profile 50 cm - 3L	Bronze	3 x 5	230	G4
FLE0L4B07	Fleure on profile 75 cm - 4L	Bronze	4 x 5	230	G4
FLE0L4B10	Fleure on profile 100 cm - 4L	Bronze	4 x 5	230	G4
FLE0L4B12	Fleure on profile 120 cm - 4L	Bronze	4 x 5	230	G4
FLE0L4B15	Fleure on profile 150 cm - 4L	Bronze	4 x 5	230	G4
FLE0L4B20	Fleure on profile 200 cm - 4L	Bronze	4 x 5	230	G4
FLE0L1XTR	Fleure extra mounted on profile	Bronze	5	230	G4
FLE1L3B03	Fleure on profile 30 cm - 3L	Brushed nickel	3 x 5	230	G4
FLE1L5B05	Fleure on profile 50 cm - 3L	Brushed nickel	3 x 5	230	G4
FLE1L4B07	Fleure on profile 75 cm - 4L	Brushed nickel	4 x 5	230	G4

FLEURE ON PROFILE

SPOT

CODE	TYPE	FINISH	WATT	VOLT	FITTING
FLE1L4B10	Fleure on profile 100 cm - 4L	Brushed nickel	4 x 5	230	G4
FLE1L4B12	Fleure on profile 120 cm - 4L	Brushed nickel	4 x 5	230	G4
FLE1L4B15	Fleure on profile 150 cm - 4L	Brushed nickel	4 x 5	230	G4
FLE1L4B20	Fleure on profile 200 cm - 4L	Brushed nickel	4 x 5	230	G4
FLE1L1XTR	Fleure extra mounted on profile	Brushed nickel	5	230	G4
FLE2L3B03	Fleure on profile 30 cm - 3L	Chrome	3 x 5	230	G4
FLE2L5B05	Fleure on profile 50 cm - 3L	Chrome	3 x 5	230	G4
FLE2L4B07	Fleure on profile 75 cm - 4L	Chrome	4 x 5	230	G4
FLE2L4B10	Fleure on profile 100 cm - 4L	Chrome	4 x 5	230	G4
FLE2L4B12	Fleure on profile 120 cm - 4L	Chrome	4 x 5	230	G4
FLE2L4B15	Fleure on profile 150 cm - 4L	Chrome	4 x 5	230	G4
FLE2L4B20	Fleure on profile 200 cm - 4L	Chrome	4 x 5	230	G4
FLE2L1XTR	Fleure extra mounted on profile	Chrome	5	230	G4

Contact us for:
Customization & connectivity

Contact us for:
Customization & connectivity

INDOOR I SPOT I FLEURE

Authentage Catalogus 2024 Authentage Katalogus 2024 Authentage Catalogue 2024 Authentage Katalog 2024 Authentage Verlichting Authentage Lighting Authentage éclairage Authentage Beleuchtung
Authentage Webshop Authentage Verlichting Authentage Armaturen Authentage Winkels Authentage Verkooppunten Authentage Verdelers Authentage Verdeelpunten Authentage België Authentage Nederland Authentage Vente en Ligne Authentage Boutique Vente en Ligne Authentage Luminaires Authentage éclairage
Authentage Revendeurs Authentage Points de vente Authentage Magasins Authentage Boutiques Authentage Points de distribution Authentage France Authentage Lighting Authentage Retailers Authentage Dealers Authentage Distributors Authentage Points of sale Authentage Resellers Authentage England
Authentage Beleuchtung Authent Beleuchtung Authentage Leuchten Authentage Händler Authentage Shops Authentage Verkaufsstellen Authentage Vertriebspartner Authentage Deutschland Authentage E-shop Authentage Geschäfte Authentage Vertriebsstellen

www.Bcosy.be - Waarschoot - België - Belgique - Belgium - Belgien tel 0032 (0) 9 378 24 30 Mail: info@bcosy.be



FLEURE TWIN DISC WITH SPRINGS

SPOT

IP 20

Select the correct driver, see p486 accessories.
Lamps not included, consult light source guide for our advice.

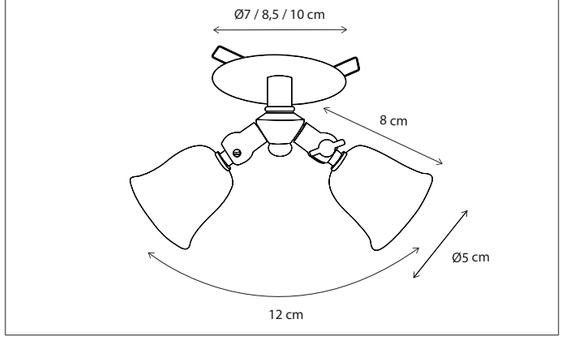



CODE	TYPE	FINISH	WATT	VOLT	FITTING
FLT0L1I70	Fleure twin disc with springs 7 cm	Bronze	2 x 5	12	G4
FLT0L1I85	Fleure twin disc with springs 8,5 cm	Bronze	2 x 5	12	G4
FLT0L1I10	Fleure twin disc with springs 10 cm	Bronze	2 x 5	12	G4
FLT1L1I70	Fleure twin disc with springs 7 cm	Brushed nickel	2 x 5	12	G4
FLT1L1I85	Fleure twin disc with springs 8,5 cm	Brushed nickel	2 x 5	12	G4
FLT1L1I10	Fleure twin disc with springs 10 cm	Brushed nickel	2 x 5	12	G4
FLT2L1I70	Fleure twin disc with springs 7 cm	Chrome	2 x 5	12	G4
FLT2L1I85	Fleure twin disc with springs 8,5 cm	Chrome	2 x 5	12	G4
FLT2L1I10	Fleure twin disc with springs 10 cm	Chrome	2 x 5	12	G4

Contact us for:

Customization & connectivity

Authentage Catalogus 2024 Authentage Katalogus 2024 Authentage Catalogue 2024 Authentage Katalog 2024 Authentage Verlichting Authentage Lighting Authentage éclairage Authentage Beleuchtung
Authentage Webshop Authentage Verlichting Authentage Armaturen Authentage Winkels Authentage Verkooppunten Authentage Verdelers Authentage Verdeelpunten Authentage België Authentage Nederland Authentage Vente en Ligne Authentage Boutique Vente en Ligne Authentage Luminaires Authentage éclairage
Authentage Revendeurs Authentage Points de vente Authentage Magasins Authentage Boutiques Authentage Points de distribution Authentage France Authentage Lighting Authentage Retailers Authentage Dealers Authentage Distributors Authentage Points of sale Authentage Resellers Authentage England
Authentage Beleuchtung Authent Beleuchtung Authentage Leuchten Authentage Händler Authentage Shops Authentage Verkaufsstellen Authentage Vertriebspartner Authentage Deutschland Authentage E-shop Authentage Geschäfte Authentage Vertriebsstellen

www.Bcosy.be - Waarschoot - België - Belgique - Belgium - Belgien tel 0032 (0) 9 378 24 30 Mail: info@bcosy.be

FLEURE TWIN
ROSAS WITH SPRINGS

SPOT

Select the correct driver, see p486 accessories.
Lamps not included, consult light source guide for our advice.



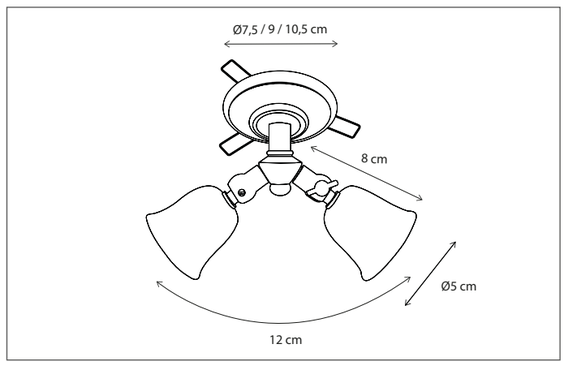

CODE	TYPE	FINISH	WATT	VOLT	FITTING
FLT0L1J75	Fleure Twin rosas with springs 7,5 cm	Bronze	2 x 5	12	G4
FLT0L1J90	Fleure Twin rosas with springs 9 cm	Bronze	2 x 5	12	G4
FLT0L1J10	Fleure Twin rosas with springs 10,5 cm	Bronze	2 x 5	12	G4
FLT1L1J75	Fleure Twin rosas with springs 7,5 cm	Brushed nickel	2 x 5	12	G4
FLT1L1J90	Fleure Twin rosas with springs 9 cm	Brushed nickel	2 x 5	12	G4
FLT1L1J10	Fleure Twin rosas with springs 10,5 cm	Brushed nickel	2 x 5	12	G4
FLT2L1J75	Fleure Twin rosas with springs 7,5 cm	Chrome	2 x 5	12	G4
FLT2L1J90	Fleure Twin rosas with springs 9 cm	Chrome	2 x 5	12	G4
FLT2L1J10	Fleure Twin rosas with springs 10,5 cm	Chrome	2 x 5	12	G4

Contact us for:
Customization & connectivity

FLEURE TWIN
MOUNTED BASE

SPOT

Select the correct driver, see p486 accessories.
Lamps not included, consult light source guide for our advice.

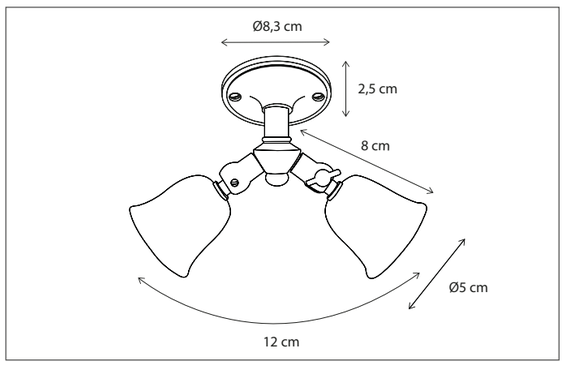



CODE	TYPE	FINISH	WATT	VOLT	FITTING
FLT0L1G83	Fleure Twin mounted base	Bronze	2 x 5	12	G4
FLT1L1G83	Fleure Twin mounted base	Brushed nickel	2 x 5	12	G4
FLT2L1G83	Fleure Twin mounted base	Chrome	2 x 5	12	G4

Contact us for:
Customization & connectivity

INDOOR I SPOT I FLEURE

Authentage Catalogus 2024 Authentage Katalogus 2024 Authentage Catalogue 2024 Authentage Katalog 2024 Authentage Verlichting Authentage Lighting Authentage éclairage Authentage Beleuchtung
Authentage Webshop Authentage Verlichting Authentage Armaturen Authentage Winkels Authentage Verkooppunten Authentage Verdelers Authentage Verdeelpunten Authentage België Authentage Nederland Authentage Vente en Ligne Authentage Boutique Vente en Ligne Authentage Luminaires Authentage éclairage
Authentage Revendeurs Authentage Points de vente Authentage Magasins Authentage Boutiques Authentage Points de distribution Authentage France Authentage Lighting Authentage Retailers Authentage Dealers Authentage Distributors Authentage Points of sale Authentage Resellers Authentage England
Authentage Beleuchtung Authent Beleuchtung Authentage Leuchten Authentage Händler Authentage Shops Authentage Verkaufsstellen Authentage Vertriebspartner Authentage Deutschland Authentage E-shop Authentage Geschäfte Authentage Vertriebsstellen

www.Bcosy.be - Waarschoot - België - Belgique - Belgium - Belgien tel 0032 (0) 9 378 24 30 Mail: info@bcosy.be

FLEURE TWIN ON ROUND BASE

SPOT

Lamps not included, consult light source guide for our advice.



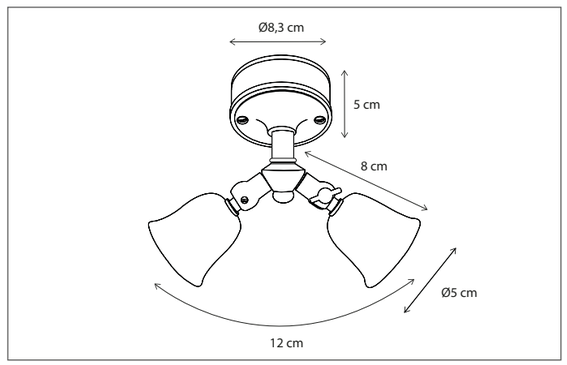

CODE	TYPE	FINISH	WATT	VOLT	FITTING
FLT0L1F83	Fleure Twin on round base	Bronze	2 x 5	230	G4
FLT1L1F83	Fleure Twin on round base	Brushed nickel	2 x 5	230	G4
FLT2L1F83	Fleure Twin on round base	Chrome	2 x 5	230	G4

Contact us for:
Customization & connectivity

FLEURE TWIN ON ROUNDED PROFILE

SPOT

Lamps not included, consult light source guide for our advice.

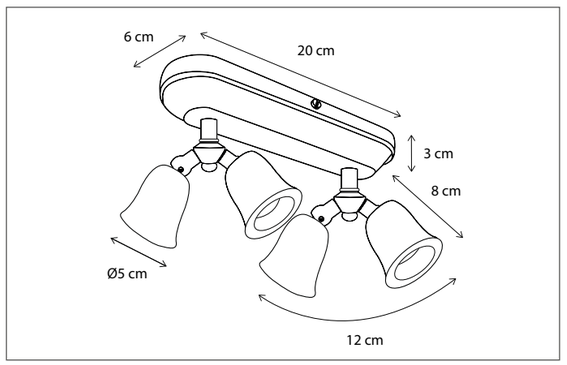



CODE	TYPE	FINISH	WATT	VOLT	FITTING
FLT0L2O02	Fleure Twin on rounded profile 2L	Bronze	4 x 5	230	G4
FLT1L2O02	Fleure Twin on rounded profile 2L	Brushed nickel	4 x 5	230	G4
FLT2L2O02	Fleure Twin on rounded profile 2L	Chrome	4 x 5	230	G4

Contact us for:
Customization & connectivity

INDOOR I SPOT I FLEURE

Authentage Catalogus 2024 Authentage Katalogus 2024 Authentage Catalogue 2024 Authentage Katalog 2024 Authentage Verlichting Authentage Lighting Authentage éclairage Authentage Beleuchtung
Authentage Webshop Authentage Verlichting Authentage Armaturen Authentage Winkels Authentage Verkooppunten Authentage Verdelers Authentage Verdeelpunten Authentage België Authentage Nederland Authentage Vente en Ligne Authentage Boutique Vente en Ligne Authentage Luminaires Authentage éclairage
Authentage Revendeurs Authentage Points de vente Authentage Magasins Authentage Boutiques Authentage Points de distribution Authentage France Authentage Lighting Authentage Retailers Authentage Dealers Authentage Distributors Authentage Points of sale Authentage Resellers Authentage England
Authentage Beleuchtung Authent Beleuchtung Authentage Leuchten Authentage Händler Authentage Shops Authentage Verkaufsstellen Authentage Vertriebspartner Authentage Deutschland Authentage E-shop Authentage Geschäfte Authentage Vertriebsstellen

www.Bcosy.be - Waarschoot - België - Belgique - Belgium - Belgien tel 0032 (0) 9 378 24 30 Mail: info@bcosy.be

FLEURE TWIN ON SQUARE BASE

SPOT

Lamps not included, consult light source guide for our advice.



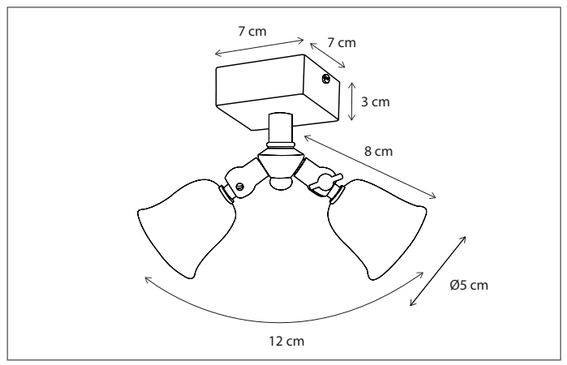

CODE	TYPE	FINISH	WATT	VOLT	FITTING
FLT0L1V70	Fleure Twin on square base	Bronze	2 x 5	230	G4
FLT1L1V70	Fleure Twin on square base	Brushed nickel	2 x 5	230	G4
FLT2L1V70	Fleure Twin on square base	Chrome	2 x 5	230	G4

Contact us for:
Customization & connectivity

FLEURE TWIN ON SQUARE BASE LARGE

SPOT

Lamps not included, consult light source guide for our advice.

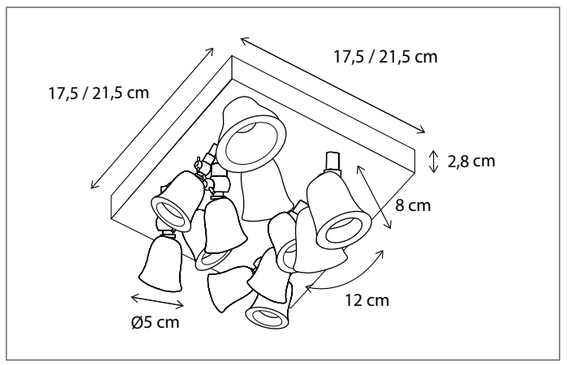



CODE	TYPE	FINISH	WATT	VOLT	FITTING
FLT0L4V17	Fleure Twin on square base 4L	Bronze	8 x 5	230	G4
FLT0L6V21	Fleure Twin on square base 6L	Bronze	12 x 5	230	G4
FLT1L4V17	Fleure Twin on square base 4L	Brushed nickel	8 x 5	230	G4
FLT1L6V21	Fleure Twin on square base 6L	Brushed nickel	12 x 5	230	G4
FLT2L4V17	Fleure Twin on square base 4L	Chrome	8 x 5	230	G4
FLT2L6V21	Fleure Twin on square base 6L	Chrome	12 x 5	230	G4

Contact us for:
Customization & connectivity

INDOOR I SPOT I FLEURE

Authentage Catalogus 2024 Authentage Katalogus 2024 Authentage Catalogue 2024 Authentage Katalog 2024 Authentage Verlichting Authentage Lighting Authentage éclairage Authentage Beleuchtung
Authentage Webshop Authentage Verlichting Authentage Armaturen Authentage Winkels Authentage Verkooppunten Authentage Verdelers Authentage Verdeelpunten Authentage België Authentage Nederland Authentage Vente en Ligne Authentage Boutique Vente en Ligne Authentage Luminaires Authentage éclairage
Authentage Revendeurs Authentage Points de vente Authentage Magasins Authentage Boutiques Authentage Points de distribution Authentage France Authentage Lighting Authentage Retailers Authentage Dealers Authentage Distributors Authentage Points of sale Authentage Resellers Authentage England
Authentage Beleuchtung Authent Beleuchtung Authentage Leuchten Authentage Händler Authentage Shops Authentage Verkaufsstellen Authentage Vertriebspartner Authentage Deutschland Authentage E-shop Authentage Geschäfte Authentage Vertriebsstellen

www.Bcosy.be - Waarschoot - België - Belgique - Belgium - Belgien tel 0032 (0) 9 378 24 30 Mail: info@bcosy.be

FLEURE TWIN ON ROUND PLATE LARGE

SPOT

Lamps not included, consult light source guide for our advice.



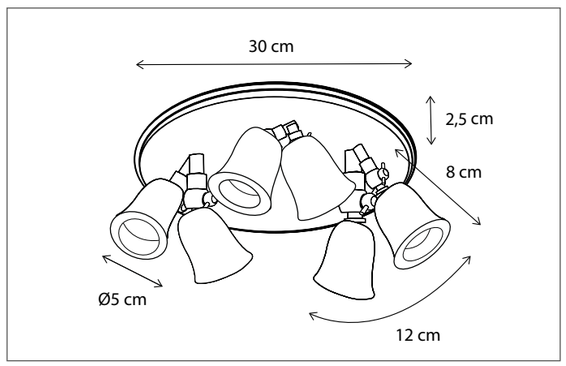

CODE	TYPE	FINISH	WATT	VOLT	FITTING
FLT0L3R30	Fleure Twin on round plate 3L	Bronze	6 x 5	230	G4
FLT0L6R30	Fleure Twin on round plate 6L	Bronze	12 x 5	230	G4
FLT1L3R30	Fleure Twin on round plate 3L	Brushed nickel	6 x 5	230	G4
FLT1L6R30	Fleure Twin on round plate 6L	Brushed nickel	12 x 5	230	G4
FLT2L3R30	Fleure Twin on round plate 3L	Chrome	6 x 5	230	G4
FLT2L6R30	Fleure Twin on round plate 6L	Chrome	12 x 5	230	G4

Contact us for:
Customization & connectivity

FLEURE TWIN M10

SPOT

Select the correct driver, see p486 accessories.
Lamps not included, consult light source guide for our advice.

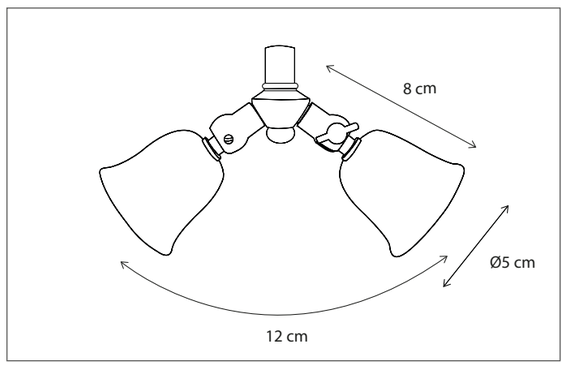



CODE	TYPE	FINISH	WATT	VOLT	FITTING
FLT0L1M10	Fleure Twin M10	Bronze	2 x 5	12	G4
FLT1L1M10	Fleure Twin M10	Brushed nickel	2 x 5	12	G4
FLT2L1M10	Fleure Twin M10	Chrome	2 x 5	12	G4

Contact us for:
Customization & connectivity

INDOOR I SPOT I FLEURE

Authentage Catalogus 2024 Authentage Katalogus 2024 Authentage Catalogue 2024 Authentage Katalog 2024 Authentage Verlichting Authentage Lighting Authentage éclairage Authentage Beleuchtung
Authentage Webshop Authentage Verlichting Authentage Armaturen Authentage Winkels Authentage Verkooppunten Authentage Verdelers Authentage Verdeelpunten Authentage België Authentage Nederland Authentage Vente en Ligne Authentage Boutique Vente en Ligne Authentage Luminaires Authentage éclairage
Authentage Revendeurs Authentage Points de vente Authentage Magasins Authentage Boutiques Authentage Points de distribution Authentage France Authentage Lighting Authentage Retailers Authentage Dealers Authentage Distributors Authentage Points of sale Authentage Resellers Authentage England
Authentage Beleuchtung Authent Beleuchtung Authentage Leuchten Authentage Händler Authentage Shops Authentage Verkaufsstellen Authentage Vertriebspartner Authentage Deutschland Authentage E-shop Authentage Geschäfte Authentage Vertriebsstellen

www.Bcosy.be - Waarschoot - België - Belgique - Belgium - Belgien tel 0032 (0) 9 378 24 30 Mail: info@bcosy.be

FLEURE TWIN ON PROFILE

SPOT

IP 20

Customise your product, choose the length of the profile and number of spots.
Lamps not included, consult light source guide for our advice.



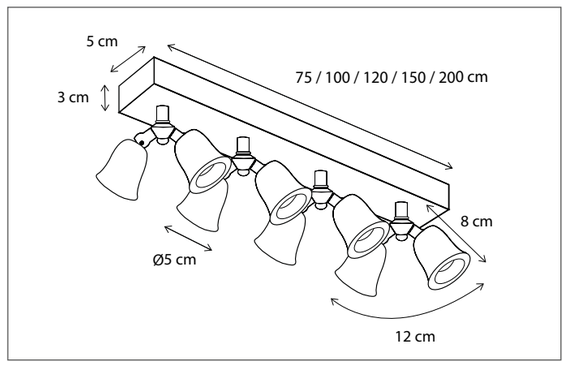

CODE	TYPE	FINISH	WATT	VOLT	FITTING
FLT0L3B03	Fleure Twin on profile 30 cm - 3L	Bronze	6 x 5	230	G4
FLT0L4B05	Fleure Twin on profile 50 cm - 4L	Bronze	8 x 5	230	G4
FLT0L4B07	Fleure Twin on profile 75 cm - 4L	Bronze	8 x 5	230	G4
FLT0L4B10	Fleure Twin on profile 100 cm - 4L	Bronze	8 x 5	230	G4
FLT0L4B12	Fleure Twin on profile 120 cm - 4L	Bronze	8 x 5	230	G4
FLT0L4B15	Fleure Twin on profile 150 cm - 4L	Bronze	8 x 5	230	G4
FLT0L4B20	Fleure Twin on profile 200 cm - 4L	Bronze	8 x 5	230	G4
FLT0L1XTR	Fleure Twin extra mounted on profile	Bronze	2 x 5	230	G4
FLT1L3B03	Fleure Twin on profile 30 cm - 3L	Brushed nickel	6 x 5	230	G4
FLT1L4B05	Fleure Twin on profile 50 cm - 4L	Brushed nickel	8 x 5	230	G4

Contact us for:
Customization & connectivity

FLEURE TWIN ON PROFILE

SPOT

CODE	TYPE	FINISH	WATT	VOLT	FITTING
FLT1L4B07	Fleure Twin on profile 75 cm - 4L	Brushed nickel	8 x 5	230	G4
FLT1L4B10	Fleure Twin on profile 100 cm - 4L	Brushed nickel	8 x 5	230	G4
FLT1L4B12	Fleure Twin on profile 120 cm - 4L	Brushed nickel	8 x 5	230	G4
FLT1L4B15	Fleure Twin on profile 150 cm - 4L	Brushed nickel	8 x 5	230	G4
FLT1L4B20	Fleure Twin on profile 200 cm - 4L	Brushed nickel	8 x 5	230	G4
FLT1L1XTR	Fleure Twin extra mounted on profile	Brushed nickel	2 x 5	230	G4
FLT2L3B03	Fleure Twin on profile 30 cm - 3L	Chrome	6 x 5	230	G4
FLT2L4B05	Fleure Twin on profile 50 cm - 4L	Chrome	8 x 5	230	G4
FLT2L4B07	Fleure Twin on profile 75 cm - 4L	Chrome	8 x 5	230	G4
FLT2L4B10	Fleure Twin on profile 100 cm - 4L	Chrome	8 x 5	230	G4
FLT2L4B12	Fleure Twin on profile 120 cm - 4L	Chrome	8 x 5	230	G4
FLT2L4B15	Fleure Twin on profile 150 cm - 4L	Chrome	8 x 5	230	G4
FLT2L4B20	Fleure Twin on profile 200 cm - 4L	Chrome	8 x 5	230	G4
FLT2L1XTR	Fleure Twin extra mounted on profile	Chrome	2 x 5	230	G4

Contact us for:
Customization & connectivity

INDOOR I SPOT I FLEURE

Authentage Catalogus 2024 Authentage Katalogus 2024 Authentage Catalogue 2024 Authentage Katalog 2024 Authentage Verlichting Authentage Lighting Authentage éclairage Authentage Beleuchtung
Authentage Webshop Authentage Verlichting Authentage Armaturen Authentage Winkels Authentage Verkooppunten Authentage Verdelers Authentage Verdeelpunten Authentage België Authentage Nederland Authentage Vente en Ligne Authentage Boutique Vente en Ligne Authentage Luminaires Authentage éclairage
Authentage Revendeurs Authentage Points de vente Authentage Magasins Authentage Boutiques Authentage Points de distribution Authentage France Authentage Lighting Authentage Retailers Authentage Dealers Authentage Distributors Authentage Points of sale Authentage Resellers Authentage England
Authentage Beleuchtung Authent Beleuchtung Authentage Leuchten Authentage Händler Authentage Shops Authentage Verkaufsstellen Authentage Vertriebspartner Authentage Deutschland Authentage E-shop Authentage Geschäfte Authentage Vertriebsstellen

www.Bcosy.be - Waarschoot - België - Belgique - Belgium - Belgien tel 0032 (0) 9 378 24 30 Mail: info@bcosy.be

FISTON DISC WITH SPRINGS

SPOT

Available in 2 versions: GU10 (no driver required) or BA15d (driver required).
For BA15d, select the correct driver p486 accessories.
Lamps not included, consult light source guide for our advice.



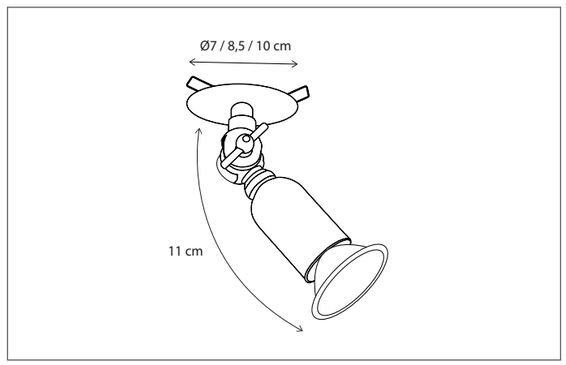

CODE	TYPE	FINISH	WATT	VOLT	FITTING
FIH001I70	Fiston disc with springs 7 cm	Bronze	8	230	GU10
FIH001I85	Fiston disc with springs 8,5 cm	Bronze	8	230	GU10
FIH001I10	Fiston disc with springs 10 cm	Bronze	8	230	GU10
FIH101I70	Fiston disc with springs 7 cm	Brushed nickel	8	230	GU10
FIH101I85	Fiston disc with springs 8,5 cm	Brushed nickel	8	230	GU10
FIH101I10	Fiston disc with springs 10 cm	Brushed nickel	8	230	GU10
FIH201I70	Fiston disc with springs 7 cm	Chrome	8	230	GU10
FIH201I85	Fiston disc with springs 8,5 cm	Chrome	8	230	GU10
FIH201I10	Fiston disc with springs 10 cm	Chrome	8	230	GU10

Contact us for:
Customization & connectivity

FISTON DISC WITH SPRINGS

SPOT

CODE	TYPE	FINISH	WATT	VOLT	FITTING
FIS0L1I70	Fiston disc with springs 7 cm	Bronze	8	12	BA15d
FIS0L1I85	Fiston disc with springs 8,5 cm	Bronze	8	12	BA15d
FIS0L1I10	Fiston disc with springs 10 cm	Bronze	8	12	BA15d
FIS1L1I70	Fiston disc with springs 7 cm	Brushed nickel	8	12	BA15d
FIS1L1I85	Fiston disc with springs 8,5 cm	Brushed nickel	8	12	BA15d
FIS1L1I10	Fiston disc with springs 10 cm	Brushed nickel	8	12	BA15d
FIS2L1I70	Fiston disc with springs 7 cm	Chrome	8	12	BA15d
FIS2L1I85	Fiston disc with springs 8,5 cm	Chrome	8	12	BA15d
FIS2L1I10	Fiston disc with springs 10 cm	Chrome	8	12	BA15d

Contact us for:
Customization & connectivity

Authentage Catalogus 2024 Authentage Katalogus 2024 Authentage Catalogue 2024 Authentage Katalog 2024 Authentage Verlichting Authentage Lighting Authentage éclairage Authentage Beleuchtung
Authentage Webshop Authentage Verlichting Authentage Armaturen Authentage Winkels Authentage Verkooppunten Authentage Verdelers Authentage Verdeelpunten Authentage België Authentage Nederland Authentage Vente en Ligne Authentage Boutique Vente en Ligne Authentage Luminaires Authentage éclairage
Authentage Revendeurs Authentage Points de vente Authentage Magasins Authentage Boutiques Authentage Points de distribution Authentage France Authentage Lighting Authentage Retailers Authentage Dealers Authentage Distributors Authentage Points of sale Authentage Resellers Authentage England
Authentage Beleuchtung Authent Beleuchtung Authentage Leuchten Authentage Händler Authentage Shops Authentage Verkaufsstellen Authentage Vertriebspartner Authentage Deutschland Authentage E-shop Authentage Geschäfte Authentage Vertriebsstellen

www.Bcosy.be - Waarschoot - België - Belgique - Belgium - Belgien tel 0032 (0) 9 378 24 30 Mail: info@bcosy.be

FISTON ROSAS WITH SPRINGS

SPOT

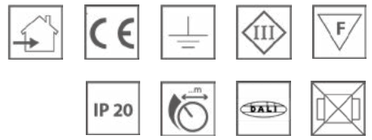

Available in 2 versions: GU10 (no driver required) or BA15d (driver required).
For BA15d, select the correct driver p486 accessories.
Lamps not included, consult light source guide for our advice.



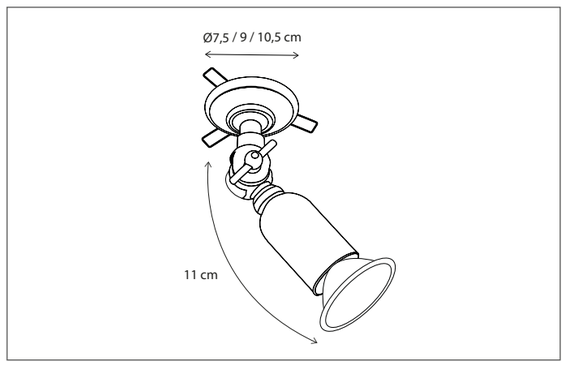

CODE	TYPE	FINISH	WATT	VOLT	FITTING
FIH001J75	Fiston rosas with springs 7,5 cm	Bronze	8	230	GU10
FIH001J90	Fiston rosas with springs 9 cm	Bronze	8	230	GU10
FIH001J10	Fiston rosas with springs 10,5 cm	Bronze	8	230	GU10
FIH101J75	Fiston rosas with springs 7,5 cm	Brushed nickel	8	230	GU10
FIH101J90	Fiston rosas with springs 9 cm	Brushed nickel	8	230	GU10
FIH101J10	Fiston rosas with springs 10,5 cm	Brushed nickel	8	230	GU10
FIH201J75	Fiston rosas with springs 7,5 cm	Chrome	8	230	GU10
FIH201J90	Fiston rosas with springs 9 cm	Chrome	8	230	GU10
FIH201J10	Fiston rosas with springs 10,5 cm	Chrome	8	230	GU10

Contact us for:
Customization & connectivity

FISTON ROSAS WITH SPRINGS

SPOT

CODE	TYPE	FINISH	WATT	VOLT	FITTING
FIS0L1J75	Fiston rosas with springs 7,5 cm	Bronze	8	12	BA15d
FIS0L1J90	Fiston rosas with springs 9 cm	Bronze	8	12	BA15d
FIS0L1J10	Fiston rosas with springs 10,5 cm	Bronze	8	12	BA15d
FIS1L1J75	Fiston rosas with springs 7,5 cm	Brushed nickel	8	12	BA15d
FIS1L1J90	Fiston rosas with springs 9 cm	Brushed nickel	8	12	BA15d
FIS1L1J10	Fiston rosas with springs 10,5 cm	Brushed nickel	8	12	BA15d
FIS2L1J75	Fiston rosas with springs 7,5 cm	Chrome	8	12	BA15d
FIS2L1J90	Fiston rosas with springs 9 cm	Chrome	8	12	BA15d
FIS2L1J10	Fiston rosas with springs 10,5 cm	Chrome	8	12	BA15d

Contact us for:
Customization & connectivity

INDOOR I SPOT I FISTON

Authentage Catalogus 2024 Authentage Katalogus 2024 Authentage Catalogue 2024 Authentage Katalog 2024 Authentage Verlichting Authentage Lighting Authentage éclairage Authentage Beleuchtung
Authentage Webshop Authentage Verlichting Authentage Armaturen Authentage Winkels Authentage Verkooppunten Authentage Verdelers Authentage Verdeelpunten Authentage België Authentage Nederland Authentage Vente en Ligne Authentage Boutique Vente en Ligne Authentage Luminaires Authentage éclairage
Authentage Revendeurs Authentage Points de vente Authentage Magasins Authentage Boutiques Authentage Points de distribution Authentage France Authentage Lighting Authentage Retailers Authentage Dealers Authentage Distributors Authentage Points of sale Authentage Resellers Authentage England
Authentage Beleuchtung Authent Beleuchtung Authentage Leuchten Authentage Händler Authentage Shops Authentage Verkaufsstellen Authentage Vertriebspartner Authentage Deutschland Authentage E-shop Authentage Geschäfte Authentage Vertriebsstellen

www.Bcosy.be - Waarschoot - België - Belgique - Belgium - Belgien tel 0032 (0) 9 378 24 30 Mail: info@bcosy.be

FISTON MOUNTED BASE

SPOT

Available in 2 versions: GU10 (no driver required) or BA15d (driver required).
For BA15d, select the correct driver p486 accessories.
Lamps not included, consult light source guide for our advice.



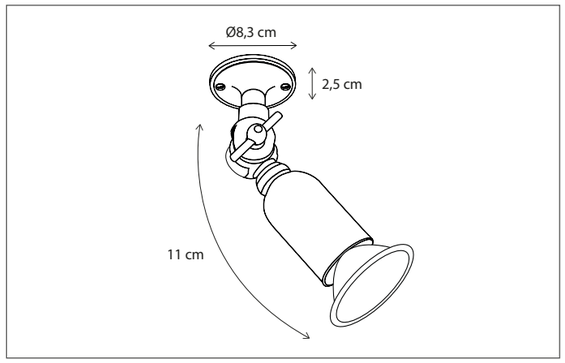

CODE	TYPE	FINISH	WATT	VOLT	FITTING
FIH001G83	Fiston mounted base	Bronze	8	230	GU10
FIH101G83	Fiston mounted base	Brushed nickel	8	230	GU10
FIH201G83	Fiston mounted base	Chrome	8	230	GU10
FIS0L1G83	Fiston mounted base	Bronze	8	12	BA15d
FIS1L1G83	Fiston mounted base	Brushed nickel	8	12	BA15d
FIS2L1G83	Fiston mounted base	Chrome	8	12	BA15d

Contact us for:

Customization & connectivity

Authentage Catalogus 2024 Authentage Katalogus 2024 Authentage Catalogue 2024 Authentage Katalog 2024 Authentage Verlichting Authentage Lighting Authentage éclairage Authentage Beleuchtung
Authentage Webshop Authentage Verlichting Authentage Armaturen Authentage Winkels Authentage Verkooppunten Authentage Verdelers Authentage Verdeelpunten Authentage België Authentage Nederland Authentage Vente en Ligne Authentage Boutique Vente en Ligne Authentage Luminaires Authentage éclairage
Authentage Revendeurs Authentage Points de vente Authentage Magasins Authentage Boutiques Authentage Points de distribution Authentage France Authentage Lighting Authentage Retailers Authentage Dealers Authentage Distributors Authentage Points of sale Authentage Resellers Authentage England
Authentage Beleuchtung Authent Beleuchtung Authentage Leuchten Authentage Händler Authentage Shops Authentage Verkaufsstellen Authentage Vertriebspartner Authentage Deutschland Authentage E-shop Authentage Geschäfte Authentage Vertriebsstellen

www.Bcosy.be - Waarschoot - België - Belgique - Belgium - Belgien tel 0032 (0) 9 378 24 30 Mail: info@bcosy.be

FISTON ON ROUND BASE

SPOT



Available in 2 versions: GU10 (no driver required) or BA15d (driver required & included).
Lamps not included, consult light source guide for our advice.



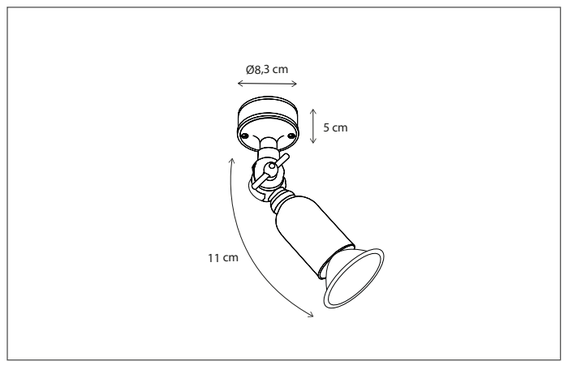

CODE	TYPE	FINISH	WATT	VOLT	FITTING
FIH001F83	Fiston on round base	Bronze	8	230	GU10
FIH101F83	Fiston on round base	Brushed nickel	8	230	GU10
FIH201F83	Fiston on round base	Chrome	8	230	GU10
FIS0L1F83	Fiston on round base	Bronze	8	230	BA15d
FIS1L1F83	Fiston on round base	Brushed nickel	8	230	BA15d
FIS2L1F83	Fiston on round base	Chrome	8	230	BA15d

Contact us for:
Customization & connectivity

FISTON ON ROUNDED PROFILE

SPOT



Available in 2 versions: GU10 (no driver required) or BA15d (driver required & included).
Lamps not included, consult light source guide for our advice.

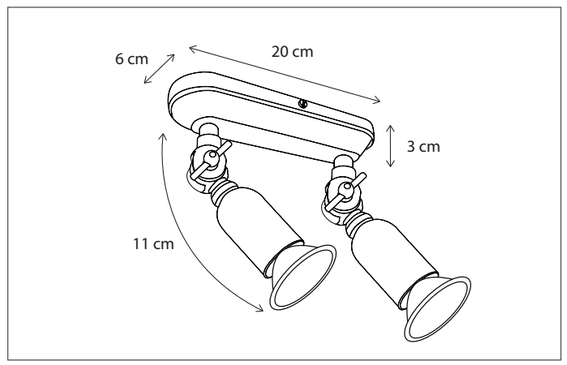



CODE	TYPE	FINISH	WATT	VOLT	FITTING
FIH002O02	Fiston on rounded profile 2L	Bronze	2 x 8	230	GU10
FIH102O02	Fiston on rounded profile 2L	Brushed nickel	2 x 8	230	GU10
FIH202O02	Fiston on rounded profile 2L	Chrome	2 x 8	230	GU10
FIS0L2O02	Fiston on rounded profile 2L	Bronze	2 x 8	230	BA15d
FIS1L2O02	Fiston on rounded profile 2L	Brushed nickel	2 x 8	230	BA15d
FIS2L2O02	Fiston on rounded profile 2L	Chrome	2 x 8	230	BA15d

Contact us for:
Customization & connectivity

INDOOR I SPOT I FISTON

Authentage Catalogus 2024 Authentage Katalogus 2024 Authentage Catalogue 2024 Authentage Katalog 2024 Authentage Verlichting Authentage Lighting Authentage éclairage Authentage Beleuchtung
Authentage Webshop Authentage Verlichting Authentage Armaturen Authentage Winkels Authentage Verkooppunten Authentage Verdelers Authentage Verdeelpunten Authentage België Authentage Nederland Authentage Vente en Ligne Authentage Boutique Vente en Ligne Authentage Luminaires Authentage éclairage
Authentage Revendeurs Authentage Points de vente Authentage Magasins Authentage Boutiques Authentage Points de distribution Authentage France Authentage Lighting Authentage Retailers Authentage Dealers Authentage Distributors Authentage Points of sale Authentage Resellers Authentage England
Authentage Beleuchtung Authent Beleuchtung Authentage Leuchten Authentage Händler Authentage Shops Authentage Verkaufsstellen Authentage Vertriebspartner Authentage Deutschland Authentage E-shop Authentage Geschäfte Authentage Vertriebsstellen

www.Bcosy.be - Waarschoot - België - Belgique - Belgium - Belgien tel 0032 (0) 9 378 24 30 Mail: info@bcosy.be

FISTON ON SQUARE BASE

SPOT

IP 20 | DALI | DI

Available in 2 versions: GU10 (no driver required) or BA15d (driver required & included).

Lamps not included, consult light source guide for our advice.



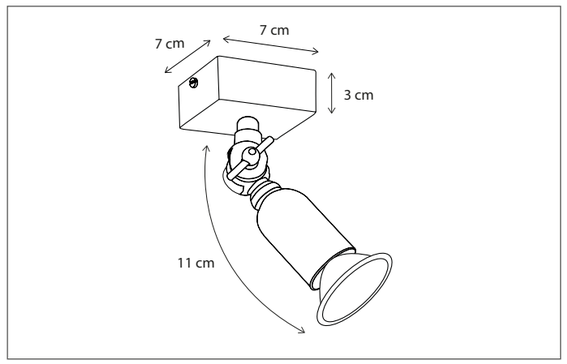

CODE	TYPE	FINISH	WATT	VOLT	FITTING
FIH001V70	Fiston on square base	Bronze	8	230	GU10
FIH101V70	Fiston on square base	Brushed nickel	8	230	GU10
FIH201V70	Fiston on square base	Chrome	8	230	GU10
FIS0L1V70	Fiston on square base	Bronze	8	230	BA15d
FIS1L1V70	Fiston on square base	Brushed nickel	8	230	BA15d
FIS2L1V70	Fiston on square base	Chrome	8	230	BA15d

Contact us for:

Customization & connectivity

FISTON ON SQUARE BASE MEDIUM

SPOT

IP 20 | DALI | DI

Available in 2 versions: GU10 (no driver required) or BA15d (driver required & included).

Lamps not included, consult light source guide for our advice.

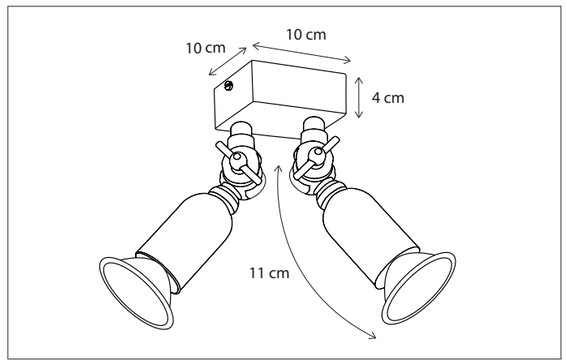



CODE	TYPE	FINISH	WATT	VOLT	FITTING
FIH002V10	Fiston on square base 2L	Bronze	2 x 8	230	GU10
FIH102V10	Fiston on square base 2L	Brushed nickel	2 x 8	230	GU10
FIH202V10	Fiston on square base 2L	Chrome	2 x 8	230	GU10
FIS0L2V10	Fiston on square base 2L	Bronze	2 x 8	230	BA15d
FIS1L2V10	Fiston on square base 2L	Brushed nickel	2 x 8	230	BA15d
FIS2L2V10	Fiston on square base 2L	Chrome	2 x 8	230	BA15d

Contact us for:

Customization & connectivity

INDOOR I SPOT I FISTON

Authentage Catalogus 2024 Authentage Katalogus 2024 Authentage Catalogue 2024 Authentage Katalog 2024 Authentage Verlichting Authentage Lighting Authentage éclairage Authentage Beleuchtung
Authentage Webshop Authentage Verlichting Authentage Armaturen Authentage Winkels Authentage Verkooppunten Authentage Verdelers Authentage Verdeelpunten Authentage België Authentage Nederland Authentage Vente en Ligne Authentage Boutique Vente en Ligne Authentage Luminaires Authentage éclairage
Authentage Revendeurs Authentage Points de vente Authentage Magasins Authentage Boutiques Authentage Points de distribution Authentage France Authentage Lighting Authentage Retailers Authentage Dealers Authentage Distributors Authentage Points of sale Authentage Resellers Authentage England
Authentage Beleuchtung Authent Beleuchtung Authentage Leuchten Authentage Händler Authentage Shops Authentage Verkaufsstellen Authentage Vertriebspartner Authentage Deutschland Authentage E-shop Authentage Geschäfte Authentage Vertriebsstellen

www.Bcosy.be - Waarschoot - België - Belgique - Belgium - Belgien tel 0032 (0) 9 378 24 30 Mail: info@bcosy.be

FISTON ON SQUARE BASE LARGE

SPOT

IP 20 | DALI | DI

Available in 2 versions: GU10 (no driver required) or BA15d (driver required & included).
Lamps not included, consult light source guide for our advice.



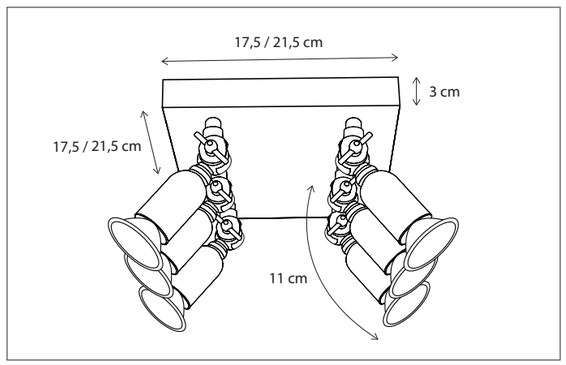

CODE	TYPE	FINISH	WATT	VOLT	FITTING
FIH004V17	Fiston on square base 4L	Bronze	4 x 8	230	GU10
FIH006V21	Fiston on square base 6L	Bronze	6 x 8	230	GU10
FIH104V17	Fiston on square base 4L	Brushed nickel	4 x 8	230	GU10
FIH106V21	Fiston on square base 6L	Brushed nickel	6 x 8	230	GU10
FIH204V17	Fiston on square base 4L	Chrome	4 x 8	230	GU10
FIH206V21	Fiston on square base 6L	Chrome	6 x 8	230	GU10
FIS0L4V17	Fiston on square base 4L	Bronze	4 x 8	230	BA15d
FIS0L6V21	Fiston on square base 6L	Bronze	6 x 8	230	BA15d
FIS1L4V17	Fiston on square base 4L	Brushed nickel	4 x 8	230	BA15d
FIS1L6V21	Fiston on square base 6L	Brushed nickel	6 x 8	230	BA15d
FIS2L4V17	Fiston on square base 4L	Chrome	4 x 8	230	BA15d
FIS2L6V21	Fiston on square base 6L	Chrome	6 x 8	230	BA15d

Contact us for:
Customization & connectivity

FISTON ON ROUND PLATE LARGE

SPOT

IP 20 | DALI | DI

Available in 2 versions: GU10 (no driver required) or BA15d (driver required & included).
Lamps not included, consult light source guide for our advice.

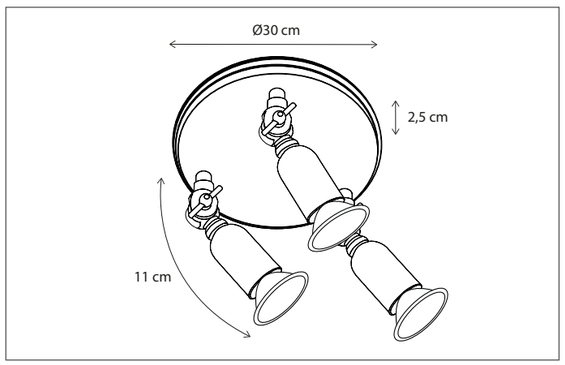



CODE	TYPE	FINISH	WATT	VOLT	FITTING
FIH003R30	Fiston on round plate 3L	Bronze	3 x 8	230	GU10
FIH006R30	Fiston on round plate 6L	Bronze	6 x 8	230	GU10
FIH103R30	Fiston on round plate 3L	Brushed nickel	3 x 8	230	GU10
FIH106R30	Fiston on round plate 6L	Brushed nickel	6 x 8	230	GU10
FIH203R30	Fiston on round plate 3L	Chrome	3 x 8	230	GU10
FIH206R30	Fiston on round plate 6L	Chrome	6 x 8	230	GU10
FIS0L3R30	Fiston on round plate 3L	Bronze	3 x 8	230	BA15d
FIS0L6R30	Fiston on round plate 6L	Bronze	6 x 8	230	BA15d
FIS1L3R30	Fiston on round plate 3L	Brushed nickel	3 x 8	230	BA15d
FIS1L6R30	Fiston on round plate 6L	Brushed nickel	6 x 8	230	BA15d
FIS2L3R30	Fiston on round plate 3L	Chrome	3 x 8	230	BA15d
FIS2L6R30	Fiston on round plate 6L	Chrome	6 x 8	230	BA15d

Contact us for:
Customization & connectivity

INDOOR I SPOT I FISTON

Authentage Catalogus 2024 Authentage Katalogus 2024 Authentage Catalogue 2024 Authentage Katalog 2024 Authentage Verlichting Authentage Lighting Authentage éclairage Authentage Beleuchtung
Authentage Webshop Authentage Verlichting Authentage Armaturen Authentage Winkels Authentage Verkooppunten Authentage Verdelers Authentage Verdeelpunten Authentage België Authentage Nederland Authentage Vente en Ligne Authentage Boutique Vente en Ligne Authentage Luminaires Authentage éclairage
Authentage Revendeurs Authentage Points de vente Authentage Magasins Authentage Boutiques Authentage Points de distribution Authentage France Authentage Lighting Authentage Retailers Authentage Dealers Authentage Distributors Authentage Points of sale Authentage Resellers Authentage England
Authentage Beleuchtung Authent Beleuchtung Authentage Leuchten Authentage Händler Authentage Shops Authentage Verkaufsstellen Authentage Vertriebspartner Authentage Deutschland Authentage E-shop Authentage Geschäfte Authentage Vertriebsstellen

www.Bcosy.be - Waarschoot - België - Belgique - Belgium - Belgien tel 0032 (0) 9 378 24 30 Mail: info@bcosy.be

SPOT

Available in 2 versions: GU10 (no driver required) or BA15d (driver required & included).
Customise your product, choose the length of the profile and number of spots.
Lamps not included, consult light source guide for our advice.



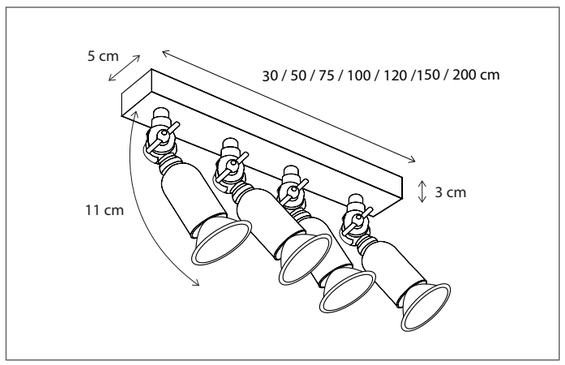

CODE	TYPE	FINISH	WATT	VOLT	FITTING
FIH002B03	Fiston on profile 30 cm - 2L	Bronze	2 x 8	230	GU10
FIH003B05	Fiston on profile 50 cm - 3L	Bronze	3 x 8	230	GU10
FIH004B07	Fiston on profile 75 cm - 4L	Bronze	4 x 8	230	GU10
FIH004B10	Fiston on profile 100 cm - 4L	Bronze	4 x 8	230	GU10
FIH004B12	Fiston on profile 120 cm - 4L	Bronze	4 x 8	230	GU10
FIH004B15	Fiston on profile 150 cm - 4L	Bronze	4 x 8	230	GU10
FIH004B20	Fiston on profile 200 cm - 4L	Bronze	4 x 8	230	GU10
FIH001XTR	Fiston extra mounted on profile	Bronze	8	230	GU10
FIH102B03	Fiston on profile 30 cm - 2L	Brushed nickel	2 x 8	230	GU10
FIH103B05	Fiston on profile 50 cm - 3L	Brushed nickel	3 x 8	230	GU10
FIH104B07	Fiston on profile 75 cm - 4L	Brushed nickel	4 x 8	230	GU10
FIH104B10	Fiston on profile 100 cm - 4L	Brushed nickel	4 x 8	230	GU10
FIH104B12	Fiston on profile 120 cm - 4L	Brushed nickel	4 x 8	230	GU10
FIH104B15	Fiston on profile 150 cm - 4L	Brushed nickel	4 x 8	230	GU10

Contact us for:
Customization & connectivity

FISTON ON PROFILE

SPOT

CODE	TYPE	FINISH	WATT	VOLT	FITTING
FIH104B20	Fiston on profile 200 cm - 4L	Brushed nickel	4 x 8	230	GU10
FIH101XTR	Fiston extra mounted on profile	Brushed nickel	8	230	GU10
FIH202B03	Fiston on profile 30 cm - 2L	Chrome	2 x 8	230	GU10
FIH203B05	Fiston on profile 50 cm - 3L	Chrome	3 x 8	230	GU10
FIH204B07	Fiston on profile 75 cm - 4L	Chrome	4 x 8	230	GU10
FIH204B10	Fiston on profile 100 cm - 4L	Chrome	4 x 8	230	GU10
FIH204B12	Fiston on profile 120 cm - 4L	Chrome	4 x 8	230	GU10
FIH204B15	Fiston on profile 150 cm - 4L	Chrome	4 x 8	230	GU10
FIH204B20	Fiston on profile 200 cm - 4L	Chrome	4 x 8	230	GU10
FIH201XTR	Fiston extra mounted on profile	Chrome	8	230	GU10
FIS0L2B03	Fiston on profile 30 cm - 2L	Bronze	2 x 8	230	BA15d
FIS0L2B03	Fiston on profile 30 cm - 2L	Bronze	2 x 8	230	BA15d
FIS0L3B05	Fiston on profile 50 cm - 3L	Bronze	3 x 8	230	BA15d
FIS0L4B07	Fiston on profile 75 cm - 4L	Bronze	4 x 8	230	BA15d
FIS0L4B10	Fiston on profile 100 cm - 4L	Bronze	4 x 8	230	BA15d
FIS0L4B12	Fiston on profile 120 cm - 4L	Bronze	4 x 8	230	BA15d
FIS0L4B15	Fiston on profile 150 cm - 4L	Bronze	4 x 8	230	BA15d
FIS0L4B20	Fiston on profile 200 cm - 4L	Bronze	4 x 8	230	BA15d
FIS0L1XTR	Fiston extra mounted on profile	Bronze	8	230	BA15d
FIS1L2B03	Fiston on profile 30 cm - 2L	Brushed nickel	2 x 8	230	BA15d
FIS1L3B05	Fiston on profile 50 cm - 3L	Brushed nickel	3 x 8	230	BA15d
FIS1L4B07	Fiston on profile 75 cm - 4L	Brushed nickel	4 x 8	230	BA15d
FIS1L4B10	Fiston on profile 100 cm - 4L	Brushed nickel	4 x 8	230	BA15d
FIS1L4B12	Fiston on profile 120 cm - 4L	Brushed nickel	4 x 8	230	BA15d
FIS1L4B15	Fiston on profile 150 cm - 4L	Brushed nickel	4 x 8	230	BA15d
FIS1L4B20	Fiston on profile 200 cm - 4L	Brushed nickel	4 x 8	230	BA15d
FIS1L1XTR	Fiston extra mounted on profile	Brushed nickel	8	230	BA15d
FIS2L2B03	Fiston on profile 30 cm - 2L	Chrome	2 x 8	230	BA15d
FIS2L3B05	Fiston on profile 50 cm - 3L	Chrome	3 x 8	230	BA15d
FIS2L4B07	Fiston on profile 75 cm - 4L	Chrome	4 x 8	230	BA15d
FIS2L4B10	Fiston on profile 100 cm - 4L	Chrome	4 x 8	230	BA15d
FIS2L4B12	Fiston on profile 120 cm - 4L	Chrome	4 x 8	230	BA15d
FIS2L4B15	Fiston on profile 150 cm - 4L	Chrome	4 x 8	230	BA15d
FIS2L4B20	Fiston on profile 200 cm - 4L	Chrome	4 x 8	230	BA15d
FIS2L1XTR	Fiston extra mounted on profile	Chrome	8	230	BA15d

Contact us for:
Customization & connectivity

INDOOR I SPOT I FISTON

Authentage Catalogus 2024 Authentage Katalogus 2024 Authentage Catalogue 2024 Authentage Katalog 2024 Authentage Verlichting Authentage Lighting Authentage éclairage Authentage Beleuchtung
Authentage Webshop Authentage Verlichting Authentage Armaturen Authentage Winkels Authentage Verkooppunten Authentage Verdelers Authentage Verdeelpunten Authentage België Authentage Nederland Authentage Vente en Ligne Authentage Boutique Vente en Ligne Authentage Luminaires Authentage éclairage
Authentage Revendeurs Authentage Points de vente Authentage Magasins Authentage Boutiques Authentage Points de distribution Authentage France Authentage Lighting Authentage Retailers Authentage Dealers Authentage Distributors Authentage Points of sale Authentage Resellers Authentage England
Authentage Beleuchtung Authent Beleuchtung Authentage Leuchten Authentage Händler Authentage Shops Authentage Verkaufsstellen Authentage Vertriebspartner Authentage Deutschland Authentage E-shop Authentage Geschäfte Authentage Vertriebsstellen

www.Bcosy.be - Waarschoot - België - Belgique - Belgium - Belgien tel 0032 (0) 9 378 24 30 Mail: info@bcosy.be

FISTON M10

SPOT

IP 20

Available in 2 versions: GU10 (no driver required) or BA15d (driver required).
For BA15d, select the correct driver p486 accessories.
Lamps not included, consult light source guide for our advice.



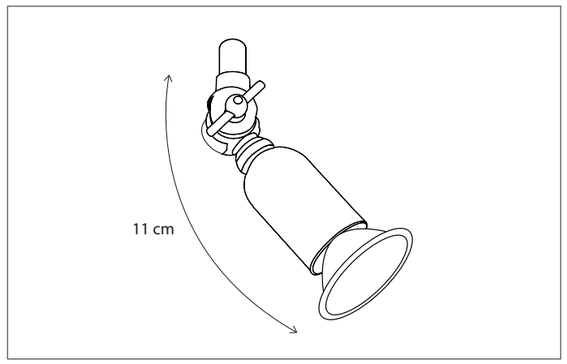

CODE	TYPE	FINISH	WATT	VOLT	FITTING
FIH001M10	Fiston M10	Bronze	8	230	GU10
FIH101M10	Fiston M10	Brushed nickel	8	230	GU10
FIH201M10	Fiston M10	Chrome	8	230	GU10
FIS1L1M10	Fiston M10	Bronze	8	12	BA15d
FIS0L1M10	Fiston M10	Brushed nickel	8	12	BA15d
FIS2L1M10	Fiston M10	Chrome	8	12	BA15d

Contact us for:
Customization & connectivity

TUBELUM DISC WITH SPRINGS

SPOT

IP 20

The light source is easy to move up and down, enabling you to change the light effect.
Inside is polished brass to create a warm glow.

Lamps not included, consult light source guide for our advice.

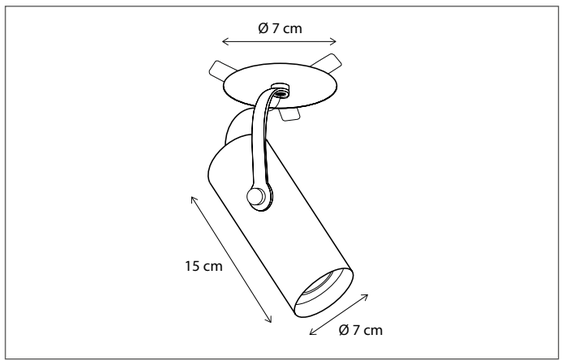



CODE	TYPE	FINISH	WATT	VOLT	FITTING
TBL001I70	Tubelum disc with springs	Bronze	8	230	GU10

Contact us for:
Customization & connectivity

Authentage Catalogus 2024 Authentage Katalogus 2024 Authentage Catalogue 2024 Authentage Katalog 2024 Authentage Verlichting Authentage Lighting Authentage éclairage Authentage Beleuchtung
Authentage Webshop Authentage Verlichting Authentage Armaturen Authentage Winkels Authentage Verkooppunten Authentage Verdelers Authentage Verdeelpunten Authentage België Authentage Nederland Authentage Vente en Ligne Authentage Boutique Vente en Ligne Authentage Luminaires Authentage éclairage
Authentage Revendeurs Authentage Points de vente Authentage Magasins Authentage Boutiques Authentage Points de distribution Authentage France Authentage Lighting Authentage Retailers Authentage Dealers Authentage Distributors Authentage Points of sale Authentage Resellers Authentage England
Authentage Beleuchtung Authent Beleuchtung Authentage Leuchten Authentage Händler Authentage Shops Authentage Verkaufsstellen Authentage Vertriebspartner Authentage Deutschland Authentage E-shop Authentage Geschäfte Authentage Vertriebsstellen

www.Bcosy.be - Waarschoot - België - Belgique - Belgium - Belgien tel 0032 (0) 9 378 24 30 Mail: info@bcosy.be

TUBELUM ON SQUARE BASE

SPOT

The light source is easy to move up and down, enabling you to change the light effect.
Inside is polished brass to create a warm glow.

Lamps not included, consult light source guide for our advice.



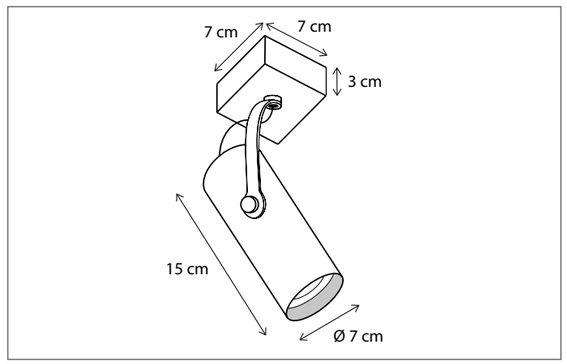

CODE	TYPE	FINISH	WATT	VOLT	FITTING
TBL001V70	Tubelum on square base	Bronze	8	230	GU10

Contact us for:
Customization & connectivity

TUBELUM ON TUBE BASE

SPOT

The light source is easy to move up and down, enabling you to change the light effect.
Inside is polished brass to create a warm glow.

Lamps not included, consult light source guide for our advice.

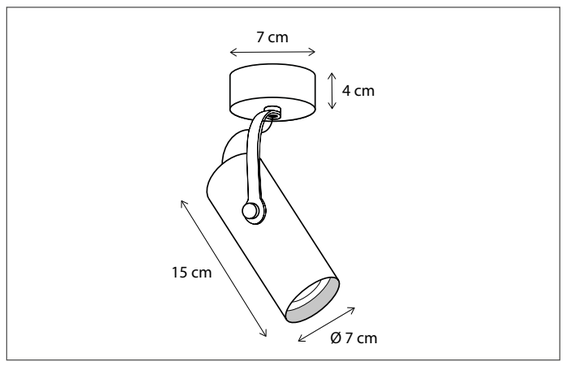



CODE	TYPE	FINISH	WATT	VOLT	FITTING
TBL001Y70	Tubelum on tube base	Bronze	8	230	GU10

Contact us for:
Customization & connectivity

INDOOR I SPOT I TUBELUM

Authentage Catalogus 2024 Authentage Katalogus 2024 Authentage Catalogue 2024 Authentage Katalog 2024 Authentage Verlichting Authentage Lighting Authentage éclairage Authentage Beleuchtung
Authentage Webshop Authentage Verlichting Authentage Armaturen Authentage Winkels Authentage Verkooppunten Authentage Verdelers Authentage Verdeelpunten Authentage België Authentage Nederland Authentage Vente en Ligne Authentage Boutique Vente en Ligne Authentage Luminaires Authentage éclairage
Authentage Revendeurs Authentage Points de vente Authentage Magasins Authentage Boutiques Authentage Points de distribution Authentage France Authentage Lighting Authentage Retailers Authentage Dealers Authentage Distributors Authentage Points of sale Authentage Resellers Authentage England
Authentage Beleuchtung Authent Beleuchtung Authentage Leuchten Authentage Händler Authentage Shops Authentage Verkaufsstellen Authentage Vertriebspartner Authentage Deutschland Authentage E-shop Authentage Geschäfte Authentage Vertriebsstellen

www.Bcosy.be - Waarschoot - België - Belgique - Belgium - Belgien tel 0032 (0) 9 378 24 30 Mail: info@bcosy.be

TUBELUM ON PROFILE

SPOT

The light source is easy to move up and down, enabling you to change the light effect.
Inside is polished brass to create a warm glow.

Lamps not included, consult light source guide for our advice.



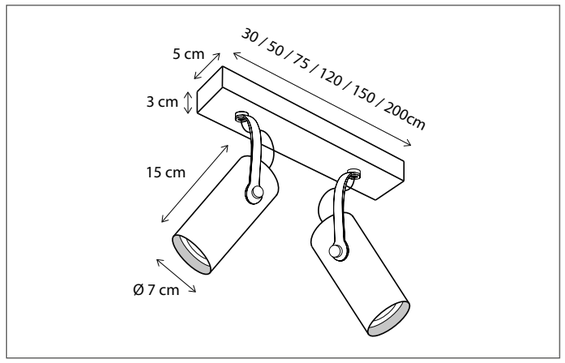

CODE	TYPE	FINISH	WATT	VOLT	FITTING
TBL002B03	Tubelum on profile 30 cm - 2L	Bronze	2 x 8	230	GU10
TBL003B05	Tubelum on profile 50 cm - 3L	Bronze	3 x 8	230	GU10
TBL004B07	Tubelum on profile 75 cm - 4L	Bronze	4 x 8	230	GU10
TBL004B10	Tubelum on profile 100 cm - 4L	Bronze	4 x 8	230	GU10
TBL004B12	Tubelum on profile 120 cm - 4L	Bronze	4 x 8	230	GU10
TBL004B15	Tubelum on profile 150 cm - 4L	Bronze	4 x 8	230	GU10
TBL004B20	Tubelum on profile 200 cm - 4L	Bronze	4 x 8	230	GU10
TBL001XTR	Tubelum extra mounted on profile	Bronze	8	230	GU10

Contact us for:

Customization & connectivity



Authentage Catalogus 2024 Authentage Katalogus 2024 Authentage Catalogue 2024 Authentage Katalog 2024 Authentage Verlichting Authentage Lighting Authentage éclairage Authentage Beleuchtung
Authentage Webshop Authentage Verlichting Authentage Armaturen Authentage Winkels Authentage Verkooppunten Authentage Verdelers Authentage Verdeelpunten Authentage België Authentage Nederland Authentage Vente en Ligne Authentage Boutique Vente en Ligne Authentage Luminaires Authentage éclairage
Authentage Revendeurs Authentage Points de vente Authentage Magasins Authentage Boutiques Authentage Points de distribution Authentage France Authentage Lighting Authentage Retailers Authentage Dealers Authentage Distributors Authentage Points of sale Authentage Resellers Authentage England
Authentage Beleuchtung Authent Beleuchtung Authentage Leuchten Authentage Händler Authentage Shops Authentage Verkaufsstellen Authentage Vertriebspartner Authentage Deutschland Authentage E-shop Authentage Geschäfte Authentage Vertriebsstellen

www.Bcosy.be - Waarschoot - België - Belgique - Belgium - Belgien tel 0032 (0) 9 378 24 30 Mail: info@bcosy.be

PROFILE 200
SPOT ON TRACK - NO DRIVER 201
SPOT ON TRACK - DRIVER 203
SUSPENSION 204

Track

INDOOR

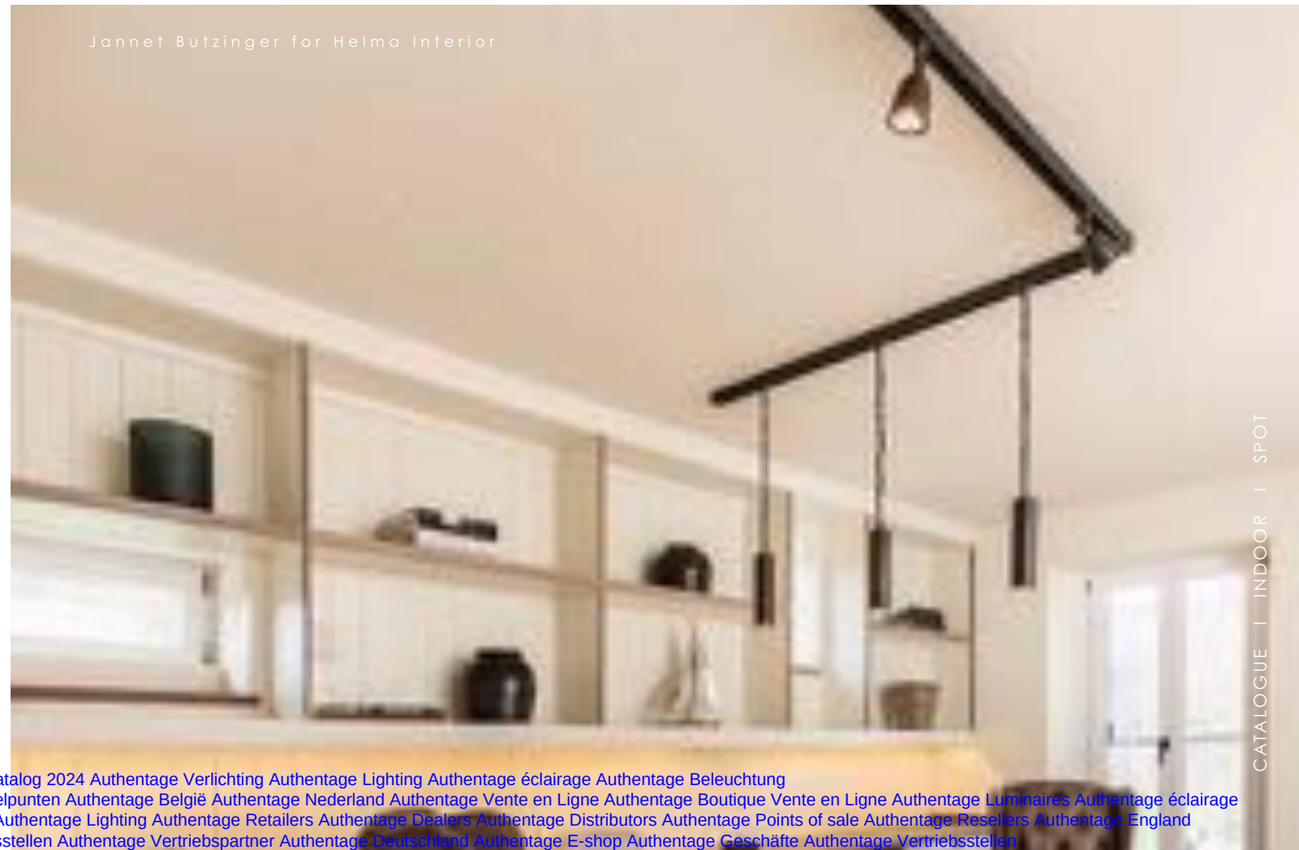

Authentage Catalogus 2024 Authentage Katalogus 2024 Authentage Catalogue 2024 Authentage Katalog 2024 Authentage Verlichting Authentage Lighting Authentage éclairage Authentage Beleuchtung
Authentage Webshop Authentage Verlichting Authentage Armaturen Authentage Winkels Authentage Verkooppunten Authentage Verdelers Authentage Verdeelpunten Authentage België Authentage Nederland Authentage Vente en Ligne Authentage Boutique Vente en Ligne Authentage Luminaires Authentage éclairage
Authentage Revendeurs Authentage Points de vente Authentage Magasins Authentage Boutiques Authentage Points de distribution Authentage France Authentage Lighting Authentage Retailers Authentage Dealers Authentage Distributors Authentage Points of sale Authentage Resellers Authentage England
Authentage Beleuchtung Authent Beleuchtung Authentage Leuchten Authentage Händler Authentage Shops Authentage Verkaufsstellen Authentage Vertriebspartner Authentage Deutschland Authentage E-shop Authentage Geschäfte Authentage Vertriebsstellen

www.Bcosy.be - Waarschoot - België - Belgique - Belgium - Belgien tel 0032 (0) 9 378 24 30 Mail: info@bcosy.be

PROFILE

TRACK

Standard available with 1 phase track.
On request 3 phase track also available.



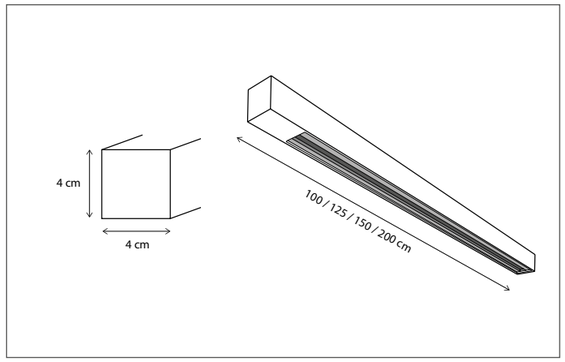

CODE	TYPE	FINISH	WATT	VOLT	FITTING
TRA000100	Track-system profile 100cm	Bronze	-	230	-
TRA000125	Track-system profile 125cm	Bronze	-	230	-
TRA000150	Track-system profile 150cm	Bronze	-	230	-
TRA000200	Track-system profile 200cm	Bronze	-	230	-
TRA100100	Track-system profile 100cm	Brushed nickel	-	230	-
TRA100125	Track-system profile 125cm	Brushed nickel	-	230	-
TRA100150	Track-system profile 150cm	Brushed nickel	-	230	-
TRA100200	Track-system profile 200cm	Brushed nickel	-	230	-
TRA200100	Track-system profile 100cm	Chrome	-	230	-
TRA200125	Track-system profile 125cm	Chrome	-	230	-
TRA200150	Track-system profile 150cm	Chrome	-	230	-
TRA200200	Track-system profile 200cm	Chrome	-	230	-

Contact us for:
Customization & connectivity

SPOT ON TRACK - NO DRIVER

TRACK

Lamps not included, consult light source guide for our advice.











	CODE	TYPE	FINISH	WATT	VOLT	FITTING
1	**COU001TRA**	Coupette on track	Bronze	12	230	GU10
2	**COM001TRA**	Comète on track	Bronze	8	230	GU10
3	**POI001TRA**	Poire on track	Bronze	8	230	GU10
4	**FIH001TRA**	Fiston on track	Bronze	8	230	GU10
5	**TBL001TS1**	Tubelum on track 15 cm	Bronze	8	230	GU10

See next page for more models.

Contact us for:
Customization & connectivity

INDOOR I TRACK

Authentage Catalogus 2024 Authentage Katalogus 2024 Authentage Catalogue 2024 Authentage Katalog 2024 Authentage Verlichting Authentage Lighting Authentage éclairage Authentage Beleuchtung
Authentage Webshop Authentage Verlichting Authentage Armaturen Authentage Winkels Authentage Verkooppunten Authentage Verdelers Authentage Verdeelpunten Authentage België Authentage Nederland Authentage Vente en Ligne Authentage Boutique Vente en Ligne Authentage Luminaires Authentage éclairage
Authentage Revendeurs Authentage Points de vente Authentage Magasins Authentage Boutiques Authentage Points de distribution Authentage France Authentage Lighting Authentage Retailers Authentage Dealers Authentage Distributors Authentage Points of sale Authentage Resellers Authentage England
Authentage Beleuchtung Authent Beleuchtung Authentage Leuchten Authentage Händler Authentage Shops Authentage Verkaufsstellen Authentage Vertriebspartner Authentage Deutschland Authentage E-shop Authentage Geschäfte Authentage Vertriebsstellen

www.Bcosy.be - Waarschoot - België - Belgique - Belgium - Belgien tel 0032 (0) 9 378 24 30 Mail: info@bcosy.be

SPOT ON TRACK - NO DRIVER

TRACK

	CODE	TYPE	FINISH	WATT	VOLT	FITTING
2	**COM101TRA**	Comète on track	Brushed nickel	8	230	GU10
3	**POI101TRA**	Poire on track	Brushed nickel	8	230	GU10
4	**FIH101TRA**	Fiston on track	Brushed nickel	8	230	GU10
2	**COM201TRA**	Comète on track	Chrome	8	230	GU10
3	**POI201TRA**	Poire on track	Chrome	8	230	GU10
4	**FIH201TRA**	Fiston on track	Chrome	8	230	GU10

Contact us for:

Customization & connectivity

SPOT ON TRACK - DRIVER

TRACK

IP 20

Lamps not included, consult light source guide for our advice.



	CODE	TYPE	FINISH	WATT	VOLT	FITTING
1	**CEN001TV7**	Centonze on track	Bronze	15	230	G53
2	**FLE001TV7**	Fleure on track	Bronze	5	230	G4
3	**FLT002TV7**	Fleure Twin on track	Bronze	2 x 5	230	G4
4	**MAR001TV7**	Marron on track	Bronze	8	230	Ba15d
5	**LIT001TRA**	Lit on track	Bronze	5	230	G4
1	**CEN101TV7**	Centonze on track	Brushed nickel	15	230	G53
2	**FLE101TV7**	Fleure on track	Brushed nickel	5	230	G4
3	**FLT102TV7**	Fleure Twin on track	Brushed nickel	2 x 5	230	G4
4	**MAR101TV7**	Marron on track	Brushed nickel	8	230	Ba15d
1	**CEN201TV7**	Centonze on track	Chrome	15	230	G53
2	**FLE201TV7**	Fleure on track	Chrome	5	230	G4
3	**FLT202TV7**	Fleure Twin on track	Chrome	2 x 5	230	G4
4	**MAR201TV7**	Marron on track	Chrome	8	230	Ba15d

Contact us for:

Customization & connectivity

INDOOR I TRACK

Authentage Catalogus 2024 Authentage Katalogus 2024 Authentage Catalogue 2024 Authentage Katalog 2024 Authentage Verlichting Authentage Lighting Authentage éclairage Authentage Beleuchtung
Authentage Webshop Authentage Verlichting Authentage Armaturen Authentage Winkels Authentage Verkooppunten Authentage Verdelers Authentage Verdeelpunten Authentage België Authentage Nederland Authentage Vente en Ligne Authentage Boutique Vente en Ligne Authentage Luminaires Authentage éclairage
Authentage Revendeurs Authentage Points de vente Authentage Magasins Authentage Boutiques Authentage Points de distribution Authentage France Authentage Lighting Authentage Retailers Authentage Dealers Authentage Distributors Authentage Points of sale Authentage Resellers Authentage England
Authentage Beleuchtung Authent Beleuchtung Authentage Leuchten Authentage Händler Authentage Shops Authentage Verkaufsstellen Authentage Vertriebspartner Authentage Deutschland Authentage E-shop Authentage Geschäfte Authentage Vertriebsstellen

www.Bcosy.be - Waarschoot - België - Belgique - Belgium - Belgien tel 0032 (0) 9 378 24 30 Mail: info@bcosy.be

SUSPENSION ON TRACK

TRACK

The light source is easy to move up and down, enabling you to change the light effect.
Inside is polished brass to create a warm glow.

On request , most suspensions from the collection are also available for track.

Lamps not included, consult light source guide for our advice.



CODE	TYPE	FINISH	WATT	VOLT	FITTING
TBL001T15	Tubelum suspension on track 15 cm	Bronze	8	230	GU10
TBL001T25	Tubelum suspension on track 25 cm	Bronze	8	230	GU10
TBL001T40	Tubelum suspension on track 40 cm	Bronze	8	230	GU10
TBL001T80	Tubelum suspension on track 80 cm	Bronze	8	230	GU10

Contact us for:

Customization & connectivity



Authentage Catalogus 2024 Authentage Katalogus 2024 Authentage Catalogue 2024 Authentage Katalog 2024 Authentage Verlichting Authentage Lighting Authentage éclairage Authentage Beleuchtung
Authentage Webshop Authentage Verlichting Authentage Armaturen Authentage Winkels Authentage Verkooppunten Authentage Verdelers Authentage Verdeelpunten Authentage België Authentage Nederland Authentage Vente en Ligne Authentage Boutique Vente en Ligne Authentage Luminaires Authentage éclairage
Authentage Revendeurs Authentage Points de vente Authentage Magasins Authentage Boutiques Authentage Points de distribution Authentage France Authentage Lighting Authentage Retailers Authentage Dealers Authentage Distributors Authentage Points of sale Authentage Resellers Authentage England
Authentage Beleuchtung Authent Beleuchtung Authentage Leuchten Authentage Händler Authentage Shops Authentage Verkaufsstellen Authentage Vertriebspartner Authentage Deutschland Authentage E-shop Authentage Geschäfte Authentage Vertriebsstellen

www.Bcosy.be - Waarschoot - België - Belgique - Belgium - Belgien tel 0032 (0) 9 378 24 30 Mail: info@bcosy.be

PHANTOME 208
Q-BRI 212
AUREOLE 214

Recessed

INDOOR



CATALOGUE I INDOOR I RECESSED

Authentage Catalogus 2024 Authentage Katalogus 2024 Authentage Catalogue 2024 Authentage Katalog 2024 Authentage Verlichting Authentage Lighting Authentage éclairage Authentage Beleuchtung
Authentage Webshop Authentage Verlichting Authentage Armaturen Authentage Winkels Authentage Verkooppunten Authentage Verdelers Authentage Verdeelpunten Authentage België Authentage Nederland Authentage Vente en Ligne Authentage Boutique Vente en Ligne Authentage Luminaires Authentage éclairage
Authentage Revendeurs Authentage Points de vente Authentage Magasins Authentage Boutiques Authentage Points de distribution Authentage France Authentage Lighting Authentage Retailers Authentage Dealers Authentage Distributors Authentage Points of sale Authentage Resellers Authentage England
Authentage Beleuchtung Authent Beleuchtung Authentage Leuchten Authentage Händler Authentage Shops Authentage Verkaufsstellen Authentage Vertriebspartner Authentage Deutschland Authentage E-shop Authentage Geschäfte Authentage Vertriebsstellen

www.Bcosy.be - Waarschoot - België - Belgique - Belgium - Belgien tel 0032 (0) 9 378 24 30 Mail: info@bcosy.be

PHANTÔME CENTONZE

RECESSED

Built-in box included.
Lamps not included, consult light source guide for our advice.





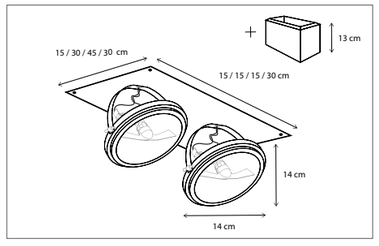

CODE	TYPE	FINISH	WATT	VOLT	FITTING
CEN0L1CL1	Phantôme centonze 1L - 15 x 15 cm	Bronze	15	230	G53
CEN0L2CL2	Phantôme centonze 2L - 30 x 15 cm	Bronze	2 x 15	230	G53
CEN0L3CL3	Phantôme centonze 3L - 45 x 15 cm	Bronze	3 x 15	230	G53
CEN0L4CL4	Phantôme centonze 4L - 30 x 30 cm	Bronze	4 x 15	230	G53
CEN1L1CL1	Phantôme centonze 1L - 15 x 15 cm	Brushed nickel	15	230	G53
CEN1L2CL2	Phantôme centonze 2L - 30 x 15 cm	Brushed nickel	2 x 15	230	G53
CEN1L3CL3	Phantôme centonze 3L - 45 x 15 cm	Brushed nickel	3 x 15	230	G53
CEN1L4CL4	Phantôme centonze 4L - 30 x 30 cm	Brushed nickel	4 x 15	230	G53
CEN2L1CL1	Phantôme centonze 1L - 15 x 15 cm	Chrome	15	230	G53
CEN2L2CL2	Phantôme centonze 2L - 30 x 15 cm	Chrome	2 x 15	230	G53
CEN2L3CL3	Phantôme centonze 3L - 45 x 15 cm	Chrome	3 x 15	230	G53
CEN2L4CL4	Phantôme centonze 4L - 30 x 30 cm	Chrome	4 x 15	230	G53

Contact us for:
Customization & connectivity

PHANTÔME CENTONZE REFLECTOR

RECESSED

Built-in box included.
2 circuits that can be switched on/off separately, enabling 3 light effects:
1. Indirect illumination via an integrated LED strip (not dimmable)
2. Direct (functional) light created by centonze spots (lamps not included, consult light source guide for our advice)
3. Combination of above

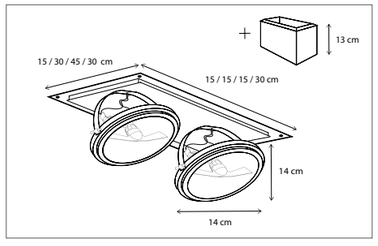





CODE	TYPE	FINISH	WATT	VOLT	FITTING
CEN001LR1	Phantôme centonze reflector 1L - 15 x 15 cm	Bronze	15 + 6	230	G53
CEN002LR1	Phantôme centonze reflector 2L - 30 x 15 cm	Bronze	2 x 15 + 9	230	G53
CEN003LR1	Phantôme centonze reflector 3L - 45 x 15 cm	Bronze	3 x 15 + 12	230	G53
CEN004LR1	Phantôme centonze reflector 4L - 30 x 30 cm	Bronze	4 x 15 +12	230	G53
CEN101LR1	Phantôme centonze reflector 1L - 15 x 15 cm	Brushed nickel	15 + 6	230	G53
CEN102LR1	Phantôme centonze reflector 2L - 30 x 15 cm	Brushed nickel	2 x 15 + 9	230	G53
CEN103LR1	Phantôme centonze reflector 3L - 45 x 15 cm	Brushed nickel	3 x 15 + 12	230	G53
CEN104LR1	Phantôme centonze reflector 4L - 30 x 30 cm	Brushed nickel	4 x 15 +12	230	G53
CEN201LR1	Phantôme centonze reflector 1L - 15 x 15 cm	Chrome	15 + 6	230	G53
CEN202LR1	Phantôme centonze reflector 2L - 30 x 15 cm	Chrome	2 x 15 + 9	230	G53
CEN203LR1	Phantôme centonze reflector 3L - 45 x 15 cm	Chrome	3 x 15 + 12	230	G53
CEN204LR1	Phantôme centonze reflector 4L - 30 x 30 cm	Chrome	4 x 15 +12	230	G53

Contact us for:
Customization & connectivity

SCAN & DISCOVER
THE MULTIPLE LIGHTING SCENES

INDOOR I RECESSED I PHANTOME

Authentage Catalogus 2024 Authentage Katalogus 2024 Authentage Catalogue 2024 Authentage Katalog 2024 Authentage Verlichting Authentage Lighting Authentage éclairage Authentage Beleuchtung
Authentage Webshop Authentage Verlichting Authentage Armaturen Authentage Winkels Authentage Verkooppunten Authentage Verdelers Authentage Verdeelpunten Authentage België Authentage Nederland Authentage Vente en Ligne Authentage Boutique Vente en Ligne Authentage Luminaires Authentage éclairage
Authentage Revendeurs Authentage Points de vente Authentage Magasins Authentage Boutiques Authentage Points de distribution Authentage France Authentage Lighting Authentage Retailers Authentage Dealers Authentage Distributors Authentage Points of sale Authentage Resellers Authentage England
Authentage Beleuchtung Authent Beleuchtung Authentage Leuchten Authentage Händler Authentage Shops Authentage Verkaufsstellen Authentage Vertriebspartner Authentage Deutschland Authentage E-shop Authentage Geschäfte Authentage Vertriebsstellen

www.Bcosy.be - Waarschoot - België - Belgique - Belgium - Belgien tel 0032 (0) 9 378 24 30 Mail: info@bcosy.be

PHANTÔME COMETE

RECESSED



Built-in box included.
Lamps not included, consult light source guide for our advice.





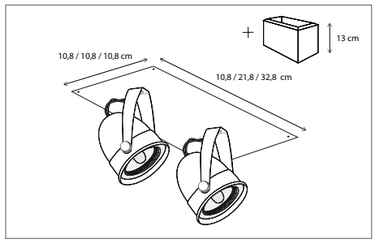

CODE	TYPE	FINISH	WATT	VOLT	FITTING
COM0L1CL5	Phantôme comète 1L - 10,8 x 10,8 cm	Bronze	8	230	GU10
COM0L2CL6	Phantôme comète 2L - 21,8 x 10,8 cm	Bronze	2 x 8	230	GU10
COM0L3CL7	Phantôme comète 3L - 32,8 x 10,8 cm	Bronze	3 x 8	230	GU10
COM0L4CL8	Phantôme comète 4L - 21,8 x 21,8 cm	Bronze	3 x 8	230	GU10
COM1L1CL5	Phantôme comète 1L - 10,8 x 10,8 cm	Brushed nickel	8	230	GU10
COM1L2CL6	Phantôme comète 2L - 21,8 x 10,8 cm	Brushed nickel	2 x 8	230	GU10
COM1L3CL7	Phantôme comète 3L - 32,8 x 10,8 cm	Brushed nickel	3 x 8	230	GU10
COM1L4CL8	Phantôme comète 4L - 21,8 x 21,8 cm	Brushed nickel	3 x 8	230	GU10
COM2L1CL5	Phantôme comète 1L - 10,8 x 10,8 cm	Chrome	8	230	GU10
COM2L2CL6	Phantôme comète 2L - 21,8 x 10,8 cm	Chrome	2 x 8	230	GU10
COM2L3CL7	Phantôme comète 3L - 32,8 x 10,8 cm	Chrome	3 x 8	230	GU10
COM2L4CL8	Phantôme comète 4L - 21,8 x 21,8 cm	Chrome	3 x 8	230	GU10

Contact us for:
Customization & connectivity

PHANTÔME COMETE REFLECTOR

RECESSED



Built-in box included.
2 circuits that can be switched on/off separately, enabling 3 light effects:
1. Indirect illumination via an integrated LED strip (not dimmable)
2. Direct (functional) light created by comète spots (lamps not included, consult light source guide for our advice)
3. Combination of above

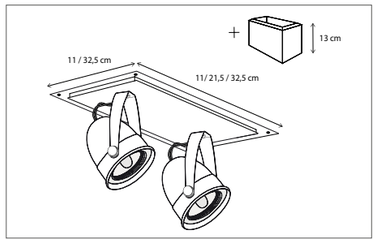





CODE	TYPE	FINISH	WATT	VOLT	FITTING
COM001LR1	Phantôme comète reflector 1L - 10,8 x 10,8 cm	Bronze	8 + 6	230	GU10
COM002LR1	Phantôme comète reflector 2L - 21,8 x 10,8 cm	Bronze	2 x 8 +9	230	GU10
COM003LR1	Phantôme comète reflector 3L - 32,8 x 10,8 cm	Bronze	3 x 8 +12	230	GU10
COM004LR1	Phantôme comète reflector 4L - 21,8 x 21,8 cm	Bronze	4 x 8 +12	230	GU10
COM101LR1	Phantôme comète reflector 1L - 10,8 x 10,8 cm	Brushed nickel	8 + 6	230	GU10
COM102LR1	Phantôme comète reflector 2L - 21,8 x 10,8 cm	Brushed nickel	2 x 8 +9	230	GU10
COM103LR1	Phantôme comète reflector 3L - 32,8 x 10,8 cm	Brushed nickel	3 x 8 +12	230	GU10
COM104LR1	Phantôme comète reflector 4L - 21,8 x 21,8 cm	Brushed nickel	4 x 8 +12	230	GU10
COM201LR1	Phantôme comète reflector 1L - 10,8 x 10,8 cm	Chrome	8 + 6	230	GU10
COM202LR1	Phantôme comète reflector 2L - 21,8 x 10,8 cm	Chrome	2 x 8 +9	230	GU10
COM203LR1	Phantôme comète reflector 3L - 32,8 x 10,8 cm	Chrome	3 x 8 +12	230	GU10
COM204LR1	Phantôme comète reflector 4L - 21,8 x 21,8 cm	Chrome	4 x 8 +12	230	GU10

Contact us for:
Customization & connectivity

SCAN & DISCOVER
THE MULTIPLE LIGHTING SCENES

INDOOR I RECESSED I PHANTOME

Authentage Catalogus 2024 Authentage Katalogus 2024 Authentage Catalogue 2024 Authentage Katalog 2024 Authentage Verlichting Authentage Lighting Authentage éclairage Authentage Beleuchtung
Authentage Webshop Authentage Verlichting Authentage Armaturen Authentage Winkels Authentage Verkooppunten Authentage Verdelers Authentage Verdeelpunten Authentage België Authentage Nederland Authentage Vente en Ligne Authentage Boutique Vente en Ligne Authentage Luminaires Authentage éclairage
Authentage Revendeurs Authentage Points de vente Authentage Magasins Authentage Boutiques Authentage Points de distribution Authentage France Authentage Lighting Authentage Retailers Authentage Dealers Authentage Distributors Authentage Points of sale Authentage Resellers Authentage England
Authentage Beleuchtung Authent Beleuchtung Authentage Leuchten Authentage Händler Authentage Shops Authentage Verkaufsstellen Authentage Vertriebspartner Authentage Deutschland Authentage E-shop Authentage Geschäfte Authentage Vertriebsstellen

www.Bcosy.be - Waarschoot - België - Belgique - Belgium - Belgien tel 0032 (0) 9 378 24 30 Mail: info@bcosy.be

Q-BRI CENTONZE SEMI RECESSED

RECESSED

IP 20

2 circuits that can be switched on/off separately, enabling 3 light effects:

1. Indirect illumination via an integrated LED strip (not dimmable)
2. Direct (functional) light created by centonze spots (lamps not included, consult light source guide for our advice)
3. Combination of above



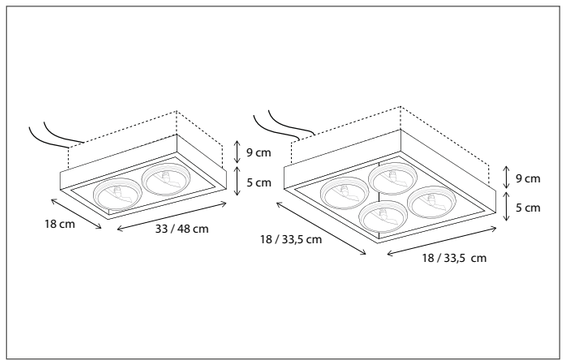

CODE	TYPE	FINISH	WATT	VOLT	FITTING
QCE0L1S18	Q-Bri centonze semi recessed 1L - 18 x 18 cm	Bronze	15 + 6	230	G53
QCE0L2S33	Q-Bri centonze semi recessed 2L - 33 x 18 cm	Bronze	2 x 15 + 12	230	G53
QCE0L3S48	Q-Bri centonze semi recessed 3L - 48 x 18 cm	Bronze	3 x 15 + 14	230	G53
QCE0L4S33	Q-Bri centonze semi recessed 4L - 33,5 x 33,5 cm	Bronze	4 x 15 + 18	230	G53
QCE1L1S18	Q-Bri centonze semi recessed 1L - 18 x 18 cm	Brushed nickel	15 + 6	230	G53
QCE1L2S33	Q-Bri centonze semi recessed 2L - 33 x 18 cm	Brushed nickel	2 x 15 + 12	230	G53
QCE1L3S48	Q-Bri centonze semi recessed 3L - 48 x 18 cm	Brushed nickel	3 x 15 + 14	230	G53
QCE1L4S33	Q-Bri centonze semi recessed 4L - 33,5 x 33,5 cm	Brushed nickel	4 x 15 + 18	230	G53
QCE2L1S18	Q-Bri centonze semi recessed 1L - 18 x 18 cm	Chrome	15 + 6	230	G53
QCE2L2S33	Q-Bri centonze semi recessed 2L - 33 x 18 cm	Chrome	2 x 15 + 12	230	G53
QCE2L3S48	Q-Bri centonze semi recessed 3L - 48 x 18 cm	Chrome	3 x 15 + 14	230	G53
QCE2L4S33	Q-Bri centonze semi recessed 4L - 33,5 x 33,5 cm	Chrome	4 x 15 + 18	230	G53

Contact us for:

Customization & connectivity

Q-BRI COMETE SEMI RECESSED

RECESSED

IP 20

On request, these fixtures are also available with a GU10 fitting.

2 circuits that can be switched on/off separately, enabling 3 light effects:

1. Indirect illumination via an integrated LED strip
2. Direct (functional) light created by comete spots (lamps not included, consult light source guide for our advice)
3. Combination of above

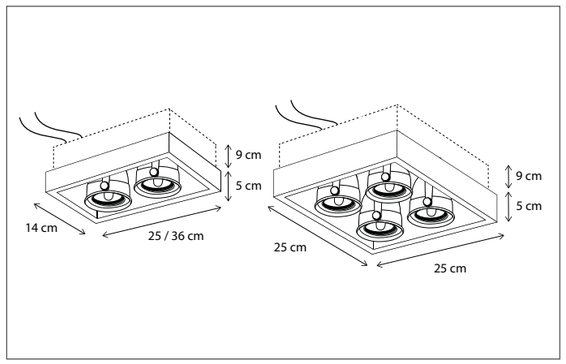



CODE	TYPE	FINISH	WATT	VOLT	FITTING
QCO0L1S14	Q-Bri comète semi recessed 1L - 14 x 14 cm	Bronze	8 + 6	230	BA15d
QCO0L2S25	Q-Bri comète semi recessed 2L - 25 x 14 cm	Bronze	2 x 8 + 9	230	BA15d
QCO0L3S36	Q-Bri comète semi recessed 3L - 36 x 14 cm	Bronze	3 x 8 + 12	230	BA15d
QCO0L4S25	Q-Bri comète semi recessed 4L - 25 x 25 cm	Bronze	4 x 8 + 12	230	BA15d
QCO1L1S14	Q-Bri comète semi recessed 1L - 14 x 14 cm	Brushed nickel	8 + 6	230	BA15d
QCO1L2S25	Q-Bri comète semi recessed 2L - 25 x 14 cm	Brushed nickel	2 x 8 + 9	230	BA15d
QCO1L3S36	Q-Bri comète semi recessed 3L - 36 x 14 cm	Brushed nickel	3 x 8 + 12	230	BA15d
QCO1L4S25	Q-Bri comète semi recessed 4L - 25 x 25 cm	Brushed nickel	4 x 8 + 12	230	BA15d
QCO2L1S14	Q-Bri comète semi recessed 1L - 14 x 14 cm	Chrome	8 + 6	230	BA15d
QCO2L2S25	Q-Bri comète semi recessed 2L - 25 x 14 cm	Chrome	2 x 8 + 9	230	BA15d
QCO2L3S36	Q-Bri comète semi recessed 3L - 36 x 14 cm	Chrome	3 x 8 + 12	230	BA15d
QCO2L4S25	Q-Bri comète semi recessed 4L - 25 x 25 cm	Chrome	4 x 8 + 12	230	BA15d

Contact us for:

Customization & connectivity

SCAN & DISCOVER

THE MULTIPLE LIGHTING SCENES

INDOOR I RECESSED I PHANTOME

Authentage Catalogus 2024 Authentage Katalogus 2024 Authentage Catalogue 2024 Authentage Katalog 2024 Authentage Verlichting Authentage Lighting Authentage éclairage Authentage Beleuchtung
Authentage Webshop Authentage Verlichting Authentage Armaturen Authentage Winkels Authentage Verkooppunten Authentage Verdelers Authentage Verdeelpunten Authentage België Authentage Nederland Authentage Vente en Ligne Authentage Boutique Vente en Ligne Authentage Luminaires Authentage éclairage
Authentage Revendeurs Authentage Points de vente Authentage Magasins Authentage Boutiques Authentage Points de distribution Authentage France Authentage Lighting Authentage Retailers Authentage Dealers Authentage Distributors Authentage Points of sale Authentage Resellers Authentage England
Authentage Beleuchtung Authent Beleuchtung Authentage Leuchten Authentage Händler Authentage Shops Authentage Verkaufsstellen Authentage Vertriebspartner Authentage Deutschland Authentage E-shop Authentage Geschäfte Authentage Vertriebsstellen

www.Bcosy.be - Waarschoot - België - Belgique - Belgium - Belgien tel 0032 (0) 9 378 24 30 Mail: info@bcosy.be

AUREOLE

RECESSED

IP 20

Lamps not included, consult light source guide for our advice.
For warmer light, add Kelvin Killer® - see p 474.
Built-in depth is 12cm.





CODE	TYPE	FINISH	WATT	VOLT	FITTING
AUR501001	Aureole	White	8	230	GU10
AUR801001	Aureole	Black	8	230	GU10

Contact us for:
Customization & connectivity

AUREOLE SHORT TUBE

RECESSED

IP 20

Lamps not included, consult light source guide for our advice.
For warmer light, add Kelvin Killer® - see p 474.
Built-in depth is 12cm.

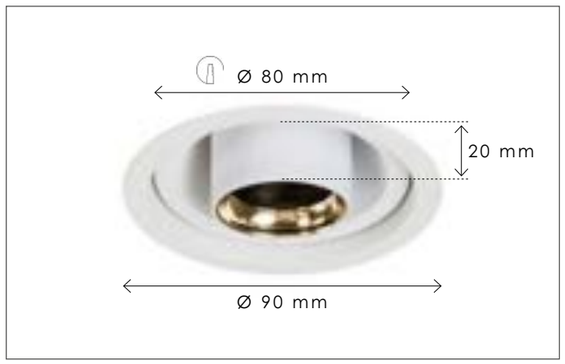



CODE	TYPE	FINISH	WATT	VOLT	FITTING
AUR501ST1	Aureole short tube	White	8	230	GU10
AUR801ST1	Aureole short tube	Black	8	230	GU10

Contact us for:
Customization & connectivity

INDOOR I RECESSED I AUREOLE

Authentage Catalogus 2024 Authentage Katalogus 2024 Authentage Catalogue 2024 Authentage Katalog 2024 Authentage Verlichting Authentage Lighting Authentage éclairage Authentage Beleuchtung
Authentage Webshop Authentage Verlichting Authentage Armaturen Authentage Winkels Authentage Verkooppunten Authentage Verdelers Authentage Verdeelpunten Authentage België Authentage Nederland Authentage Vente en Ligne Authentage Boutique Vente en Ligne Authentage Luminaires Authentage éclairage
Authentage Revendeurs Authentage Points de vente Authentage Magasins Authentage Boutiques Authentage Points de distribution Authentage France Authentage Lighting Authentage Retailers Authentage Dealers Authentage Distributors Authentage Points of sale Authentage Resellers Authentage England
Authentage Beleuchtung Authent Beleuchtung Authentage Leuchten Authentage Händler Authentage Shops Authentage Verkaufsstellen Authentage Vertriebspartner Authentage Deutschland Authentage E-shop Authentage Geschäfte Authentage Vertriebsstellen

www.Bcosy.be - Waarschoot - België - Belgique - Belgium - Belgien tel 0032 (0) 9 378 24 30 Mail: info@bcosy.be

AUREOLE LONG TUBE

RECESSED

IP 20

Lamps not included, consult light source guide for our advice.
For warmer light, add Kelvin Killer® - see p 474.
Built-in depth is 12cm.

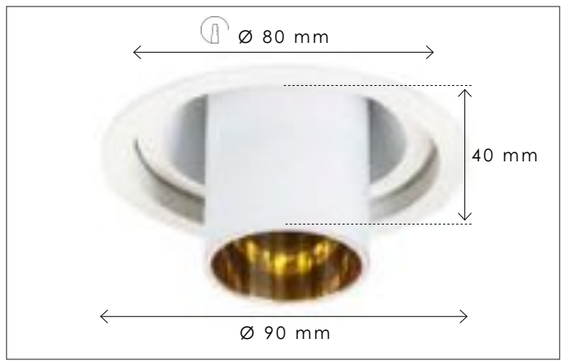



CODE	TYPE	FINISH	WATT	VOLT	FITTING
AUR501LT1	Aureole long tube	White	8	230	GU10
AUR801LT1	Aureole long tube	Black	8	230	GU10

Contact us for:
Customization & connectivity

AUREOLE GOLD REFLECTOR

RECESSED

IP 20

Lamps not included, consult light source guide for our advice.
For warmer light, add Kelvin Killer® - see p 474.
Built-in depth is 12cm.

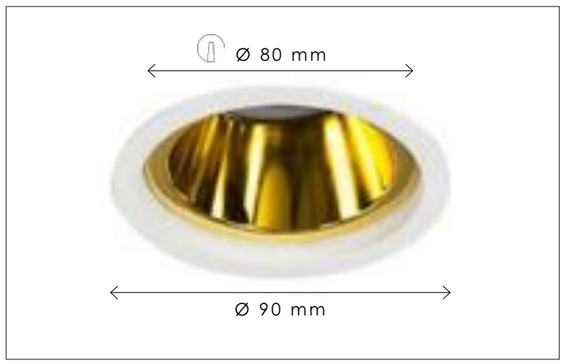



CODE	TYPE	FINISH	WATT	VOLT	FITTING
AUR50100R	Aureole gold reflector	White	8	230	GU10
AUR80100R	Aureole gold reflector	Black	8	230	GU10

Contact us for:
Customization & connectivity

INDOOR I RECESSED I AUREOLE

Authentage Catalogus 2024 Authentage Katalogus 2024 Authentage Catalogue 2024 Authentage Katalog 2024 Authentage Verlichting Authentage Lighting Authentage éclairage Authentage Beleuchtung
Authentage Webshop Authentage Verlichting Authentage Armaturen Authentage Winkels Authentage Verkooppunten Authentage Verdelers Authentage Verdeelpunten Authentage België Authentage Nederland Authentage Vente en Ligne Authentage Boutique Vente en Ligne Authentage Luminaires Authentage éclairage
Authentage Revendeurs Authentage Points de vente Authentage Magasins Authentage Boutiques Authentage Points de distribution Authentage France Authentage Lighting Authentage Retailers Authentage Dealers Authentage Distributors Authentage Points of sale Authentage Resellers Authentage England
Authentage Beleuchtung Authent Beleuchtung Authentage Leuchten Authentage Händler Authentage Shops Authentage Verkaufsstellen Authentage Vertriebspartner Authentage Deutschland Authentage E-shop Authentage Geschäfte Authentage Vertriebsstellen

www.Bcosy.be - Waarschoot - België - Belgique - Belgium - Belgien tel 0032 (0) 9 378 24 30 Mail: info@bcosy.be

AUREOLE SHORT TUBE GOLD REFLECTOR

RECESSED

Lamps not included, consult light source guide for our advice.
For warmer light, add Kelvin Killer® - see p 474.
Built-in depth is 12cm.

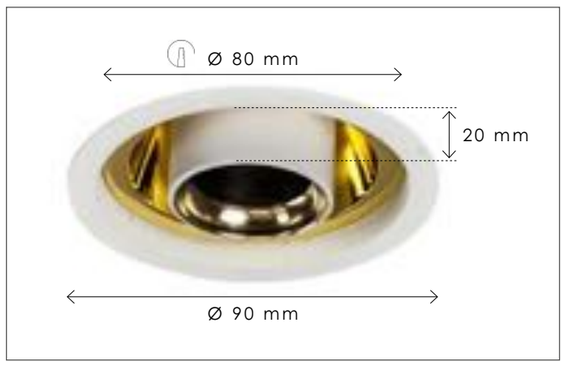

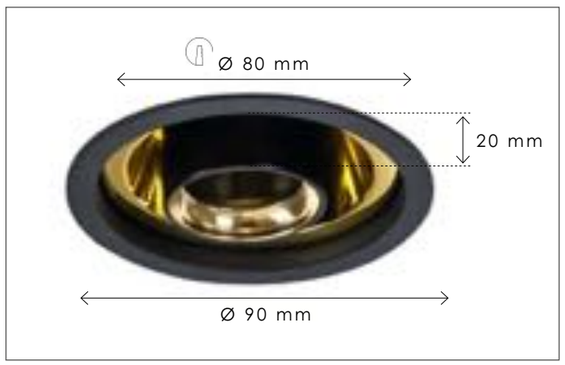

CODE	TYPE	FINISH	WATT	VOLT	FITTING
AUR501STR	Aureole short tube gold reflector	White	8	230	GU10
AUR801STR	Aureole short tube gold reflector	Black	8	230	GU10

Contact us for:
Customization & connectivity

AUREOLE LONG TUBE GOLD REFLECTOR

RECESSED

Lamps not included, consult light source guide for our advice.
For warmer light, add Kelvin Killer® - see p 474.
Built-in depth is 12cm.

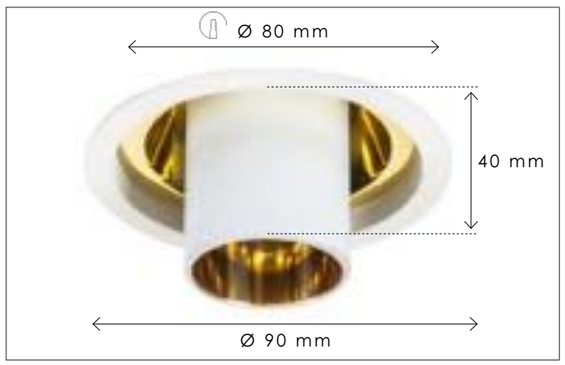



CODE	TYPE	FINISH	WATT	VOLT	FITTING
AUR501LTR	Aureole long tube gold reflector	White	8	230	GU10
AUR801LTR	Aureole long tube gold reflector	Black	8	230	GU10

Contact us for:
Customization & connectivity

INDOOR I RECESSED I AUREOLE

Authentage Catalogus 2024 Authentage Katalogus 2024 Authentage Catalogue 2024 Authentage Katalog 2024 Authentage Verlichting Authentage Lighting Authentage éclairage Authentage Beleuchtung
Authentage Webshop Authentage Verlichting Authentage Armaturen Authentage Winkels Authentage Verkooppunten Authentage Verdelers Authentage Verdeelpunten Authentage België Authentage Nederland Authentage Vente en Ligne Authentage Boutique Vente en Ligne Authentage Luminaires Authentage éclairage
Authentage Revendeurs Authentage Points de vente Authentage Magasins Authentage Boutiques Authentage Points de distribution Authentage France Authentage Lighting Authentage Retailers Authentage Dealers Authentage Distributors Authentage Points of sale Authentage Resellers Authentage England
Authentage Beleuchtung Authent Beleuchtung Authentage Leuchten Authentage Händler Authentage Shops Authentage Verkaufsstellen Authentage Vertriebspartner Authentage Deutschland Authentage E-shop Authentage Geschäfte Authentage Vertriebsstellen

www.Bcosy.be - Waarschoot - België - Belgique - Belgium - Belgien tel 0032 (0) 9 378 24 30 Mail: info@bcosy.be

AUREOLE SENSOR

RECESSED

IP 20

Built-in depth is 12cm.

220







CODE	TYPE	FINISH	WATT	VOLT	FITTING
AUR500SEN	Aureole sensor PIR	White	-	230	-
AUR800SEN	Aureole sensor PIR	Black	-	230	-

Contact us for:

Customization & connectivity

Authentage Catalogus 2024 Authentage Katalogus 2024 Authentage Catalogue 2024 Authentage Katalog 2024 Authentage Verlichting Authentage Lighting Authentage éclairage Authentage Beleuchtung
Authentage Webshop Authentage Verlichting Authentage Armaturen Authentage Winkels Authentage Verkooppunten Authentage Verdelers Authentage Verdeelpunten Authentage België Authentage Nederland Authentage Vente en Ligne Authentage Boutique Vente en Ligne Authentage Luminaires Authentage éclairage
Authentage Revendeurs Authentage Points de vente Authentage Magasins Authentage Boutiques Authentage Points de distribution Authentage France Authentage Lighting Authentage Retailers Authentage Dealers Authentage Distributors Authentage Points of sale Authentage Resellers Authentage England
Authentage Beleuchtung Authent Beleuchtung Authentage Leuchten Authentage Händler Authentage Shops Authentage Verkaufsstellen Authentage Vertriebspartner Authentage Deutschland Authentage E-shop Authentage Geschäfte Authentage Vertriebsstellen

www.Bcosy.be - Waarschoot - België - Belgique - Belgium - Belgien tel 0032 (0) 9 378 24 30 Mail: info@bcosy.be

BELLEFEU® 224
VITRINE PETITE 232
VITRINE 233
ALB 238
BALUME 240
Q-BRI 242
MATISSE 245
MICRO 246
MACRO 252
TISSELUM 256
TUBELUM 257
FILOU 258
BOMPA 260
BAINWAT 262
ECLIPS 264
BEAUTIQUE 265
PHANTOME 314
LISIBLE 267
FISTON CAPUCHE 272
SEVERE 274
GALED 278
GRILLE 281

Wall

INDOOR



CATALOGUE I INDOOR I WALL

Authentage Catalogus 2024 Authentage Katalogus 2024 Authentage Catalogue 2024 Authentage Katalog 2024 Authentage Verlichting Authentage Lighting Authentage éclairage Authentage Beleuchtung
Authentage Webshop Authentage Verlichting Authentage Armaturen Authentage Winkels Authentage Verkooppunten Authentage Verdelers Authentage Verdeelpunten Authentage België Authentage Nederland Authentage Vente en Ligne Authentage Boutique Vente en Ligne Authentage Luminaires Authentage éclairage
Authentage Revendeurs Authentage Points de vente Authentage Magasins Authentage Boutiques Authentage Points de distribution Authentage France Authentage Lighting Authentage Retailers Authentage Dealers Authentage Distributors Authentage Points of sale Authentage Resellers Authentage England
Authentage Beleuchtung Authent Beleuchtung Authentage Leuchten Authentage Händler Authentage Shops Authentage Verkaufsstellen Authentage Vertriebspartner Authentage Deutschland Authentage E-shop Authentage Geschäfte Authentage Vertriebsstellen

www.Bcosy.be - Waarschoot - België - Belgique - Belgium - Belgien tel 0032 (0) 9 378 24 30 Mail: info@bcosy.be

IP 20

Integrated push dimmer for adjustable candle effect.

For control/connectivity options, see p494 accessories.



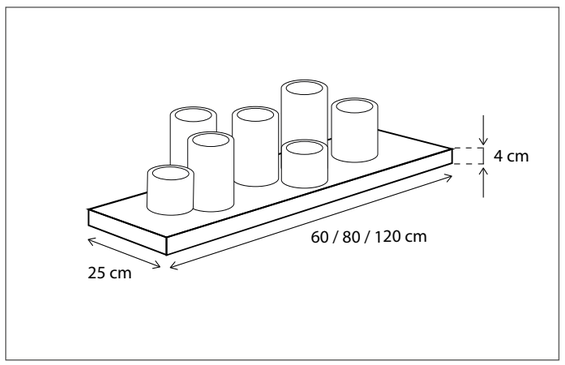

CODE	TYPE	FINISH	WATT	VOLT	FITTING
BWP005D06	Bellefeu® plateau 60 cm - 5 candles wax	Bronze	5 x 2,4	230	-
BWP007D08	Bellefeu® plateau 80 cm - 7 candles wax	Bronze	7 x 2,4	230	-
BWP010D12	Bellefeu® plateau 120 cm - 10 candles wax	Bronze	10 x 2,4	230	-
BWP105D06	Bellefeu® plateau 60 cm - 5 candles wax	Brushed nickel	5 x 2,4	230	-
BWP107D08	Bellefeu® plateau 80 cm - 7 candles wax	Brushed nickel	7 x 2,4	230	-
BWP110D12	Bellefeu® plateau 120 cm - 10 candles wax	Brushed nickel	10 x 2,4	230	-
BWP205D06	Bellefeu® plateau 60 cm - 5 candles wax	Chrome	5 x 2,4	230	-
BWP207D08	Bellefeu® plateau 80 cm - 7 candles wax	Chrome	7 x 2,4	230	-

SCAN & DISCOVER
THE BELLEFEU EFFECT

Contact us for:
Customization & connectivity

BELLEFEU® PLATEAU

WALL

CODE	TYPE	FINISH	WATT	VOLT	FITTING
BAP005D06	Bellefeu® plateau 60 cm - 5 candles alabaster	Bronze	5 x 2,4	230	-
BAP007D08	Bellefeu® plateau 80 cm - 7 candles alabaster	Bronze	7 x 2,4	230	-
BAP010D12	Bellefeu® plateau 120 cm - 10 candles alabaster	Bronze	10 x 2,4	230	-
BAP105D06	Bellefeu® plateau 60 cm - 5 candles alabaster	Brushed nickel	5 x 2,4	230	-
BAP107D08	Bellefeu® plateau 80 cm - 7 candles alabaster	Brushed nickel	7 x 2,4	230	-
BAP110D12	Bellefeu® plateau 120 cm - 10 candles alabaster	Brushed nickel	10 x 2,4	230	-
BAP205D06	Bellefeu® plateau 60 cm - 5 candles alabaster	Chrome	5 x 2,4	230	-
BAP207D08	Bellefeu® plateau 80 cm - 7 candles alabaster	Chrome	7 x 2,4	230	-
BAP210D12	Bellefeu® plateau 120 cm - 10 candles alabaster	Chrome	10 x 2,4	230	-

Contact us for:
Customization & connectivity

INDOOR I WALL I BELLEFEU®

Authentage Catalogus 2024 Authentage Katalogus 2024 Authentage Catalogue 2024 Authentage Katalog 2024 Authentage Verlichting Authentage Lighting Authentage éclairage Authentage Beleuchtung
Authentage Webshop Authentage Verlichting Authentage Armaturen Authentage Winkels Authentage Verkooppunten Authentage Verdelers Authentage Verdeelpunten Authentage België Authentage Nederland Authentage Vente en Ligne Authentage Boutique Vente en Ligne Authentage Luminaires Authentage éclairage
Authentage Revendeurs Authentage Points de vente Authentage Magasins Authentage Boutiques Authentage Points de distribution Authentage France Authentage Lighting Authentage Retailers Authentage Dealers Authentage Distributors Authentage Points of sale Authentage Resellers Authentage England
Authentage Beleuchtung Authent Beleuchtung Authentage Leuchten Authentage Händler Authentage Shops Authentage Verkaufsstellen Authentage Vertriebspartner Authentage Deutschland Authentage E-shop Authentage Geschäfte Authentage Vertriebsstellen

www.Bcosy.be - Waarschoot - België - Belgique - Belgium - Belgien tel 0032 (0) 9 378 24 30 Mail: info@bcosy.be

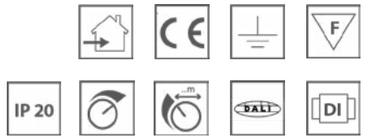

Integrated push dimmer for adjustable candle effect.

For control/connectivity options, see p494 accessories.



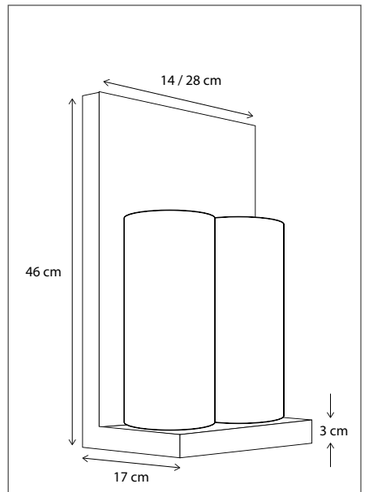

CODE	TYPE	FINISH	WATT	VOLT	FITTING
BWL001D01	Bellefeu® on L profile - 1 candle wax	Bronze	2,4	230	-
BWL002D02	Bellefeu® on L profile - 2 candles wax	Bronze	2 x 2,4	230	-
BWL101D01	Bellefeu® on L profile - 1 candle wax	Brushed nickel	2,4	230	-
BWL102D02	Bellefeu® on L profile - 2 candles wax	Brushed nickel	2 x 2,4	230	-
BWL201D01	Bellefeu® on L profile - 1 candle wax	Chrome	2,4	230	-
BWL202D02	Bellefeu® on L profile - 2 candles wax	Chrome	2 x 2,4	230	-

SCAN & DISCOVER
THE BELLEFEU EFFECT

Contact us for:
Customization & connectivity

BELLEFEU® ON
L PROFILE

WALL

CODE	TYPE	FINISH	WATT	VOLT	FITTING
BAL001D01	Bellefeu® on L profile - 1 candle alabaster	Bronze	2,4	230	-
BAL002D02	Bellefeu® on L profile - 2 candles alabaster	Bronze	2 x 2,4	230	-
BAL101D01	Bellefeu® on L profile - 1 candle alabaster	Brushed nickel	2,4	230	-
BAL102D02	Bellefeu® on L profile - 2 candles alabaster	Brushed nickel	2 x 2,4	230	-
BAL201D01	Bellefeu® on L profile - 1 candle alabaster	Chrome	2,4	230	-
BAL202D02	Bellefeu® on L profile - 2 candles alabaster	Chrome	2 x 2,4	230	-

Contact us for:
Customization & connectivity

INDOOR I WALL I BELLEFEU®

Authentage Catalogus 2024 Authentage Katalogus 2024 Authentage Catalogue 2024 Authentage Katalog 2024 Authentage Verlichting Authentage Lighting Authentage éclairage Authentage Beleuchtung
Authentage Webshop Authentage Verlichting Authentage Armaturen Authentage Winkels Authentage Verkooppunten Authentage Verdelers Authentage Verdeelpunten Authentage België Authentage Nederland Authentage Vente en Ligne Authentage Boutique Vente en Ligne Authentage Luminaires Authentage éclairage
Authentage Revendeurs Authentage Points de vente Authentage Magasins Authentage Boutiques Authentage Points de distribution Authentage France Authentage Lighting Authentage Retailers Authentage Dealers Authentage Distributors Authentage Points of sale Authentage Resellers Authentage England
Authentage Beleuchtung Authent Beleuchtung Authentage Leuchten Authentage Händler Authentage Shops Authentage Verkaufsstellen Authentage Vertriebspartner Authentage Deutschland Authentage E-shop Authentage Geschäfte Authentage Vertriebsstellen

www.Bcosy.be - Waarschoot - België - Belgique - Belgium - Belgien tel 0032 (0) 9 378 24 30 Mail: info@bcosy.be

BELLEFEU® VITRINE

WALL

IP 20 | DALI | DI

Integrated push dimmer for adjustable candle effect.

For control/connectivity options, see p494 accessories.



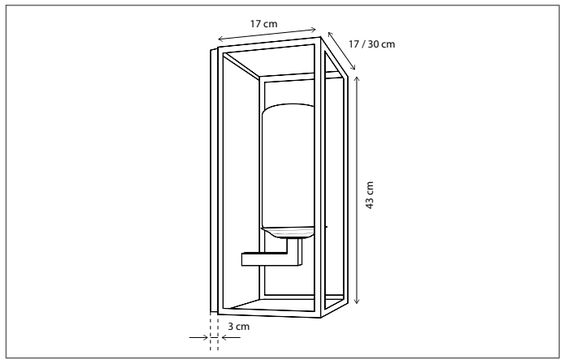

CODE	TYPE	FINISH	WATT	VOLT	FITTING
BVW001INW	Bellefeu® vitrine wall - 1 candle wax	Bronze	2,4	230	-
BVW002INW	Bellefeu® vitrine wall - 2 candles wax	Bronze	2 x 2,4	230	-
BVW101INW	Bellefeu® vitrine wall - 1 candle wax	Brushed nickel	2,4	230	-
BVW102INW	Bellefeu® vitrine wall - 2 candles wax	Brushed nickel	2 x 2,4	230	-
BVW201INW	Bellefeu® vitrine wall - 1 candle wax	Chrome	2,4	230	-
BVW202INW	Bellefeu® vitrine wall - 2 candles wax	Chrome	2 x 2,4	230	-
BAW001INW	Bellefeu® vitrine wall - 1 candle alabaster	Bronze	2,4	230	-
BAW002INW	Bellefeu® vitrine wall - 2 candles alabaster	Bronze	2 x 2,4	230	-
BAW101INW	Bellefeu® vitrine wall - 1 candle alabaster	Brushed nickel	2,4	230	-
BAW102INW	Bellefeu® vitrine wall - 2 candles alabaster	Brushed nickel	2 x 2,4	230	-
BAW201INW	Bellefeu® vitrine wall - 1 candle alabaster	Chrome	2,4	230	-
BAW202INW	Bellefeu® vitrine wall - 2 candles alabaster	Chrome	2 x 2,4	230	-

SCAN & DISCOVER
THE BELLEFEU EFFECT

Contact us for:
Customization & connectivity

BELLEFEU® PLATE

WALL

IP 20 | DALI | DI

Integrated push dimmer for adjustable candle effect.

For control/connectivity options, see p494 accessories.

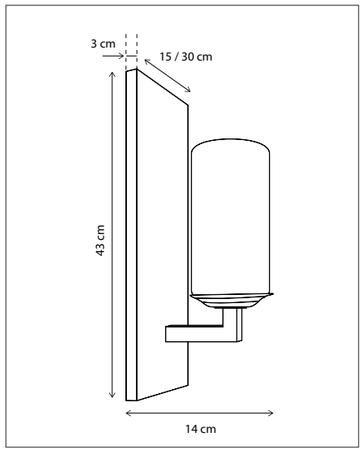



CODE	TYPE	FINISH	WATT	VOLT	FITTING
BWP001D15	Bellefeu® plate - 1 candle wax	Bronze	2,4	230	-
BWP002D30	Bellefeu® plate- 2 candles wax	Bronze	2 x 2,4	230	-
BWP101D15	Bellefeu® plate - 1 candle wax	Brushed nickel	2,4	230	-
BWP102D30	Bellefeu® plate- 2 candles wax	Brushed nickel	2 x 2,4	230	-
BWP201D15	Bellefeu® plate - 1 candle wax	Chrome	2,4	230	-
BWP202D30	Bellefeu® plate - 2 candles wax	Chrome	2 x 2,4	230	-
BAP001D15	Bellefeu® plate - 1 candle alabaster	Bronze	2,4	230	-
BAP002D30	Bellefeu® plate - 2 candles alabaster	Bronze	2 x 2,4	230	-
BAP101D15	Bellefeu® plate - 1 candle alabaster	Brushed nickel	2,4	230	-
BAP102D30	Bellefeu® plate - 2 candles alabaster	Brushed nickel	2 x 2,4	230	-
BAP201D15	Bellefeu® plate - 1 candle alabaster	Chrome	2,4	230	-
BAP202D30	Bellefeu® plate - 2 candles alabaster	Chrome	2 x 2,4	230	-

Contact us for:
Customization & connectivity

INDOOR I WALL I BELLEFEU®

Authentage Catalogus 2024 Authentage Katalogus 2024 Authentage Catalogue 2024 Authentage Katalog 2024 Authentage Verlichting Authentage Lighting Authentage éclairage Authentage Beleuchtung
Authentage Webshop Authentage Verlichting Authentage Armaturen Authentage Winkels Authentage Verkooppunten Authentage Verdelers Authentage Verdeelpunten Authentage België Authentage Nederland Authentage Vente en Ligne Authentage Boutique Vente en Ligne Authentage Luminaires Authentage éclairage
Authentage Revendeurs Authentage Points de vente Authentage Magasins Authentage Boutiques Authentage Points de distribution Authentage France Authentage Lighting Authentage Retailers Authentage Dealers Authentage Distributors Authentage Points of sale Authentage Resellers Authentage England
Authentage Beleuchtung Authent Beleuchtung Authentage Leuchten Authentage Händler Authentage Shops Authentage Verkaufsstellen Authentage Vertriebspartner Authentage Deutschland Authentage E-shop Authentage Geschäfte Authentage Vertriebsstellen

www.Bcosy.be - Waarschoot - België - Belgique - Belgium - Belgien tel 0032 (0) 9 378 24 30 Mail: info@bcosy.be

IP 20

Integrated push dimmer for adjustable candle effect.

For control/connectivity options, see p494 accessories.



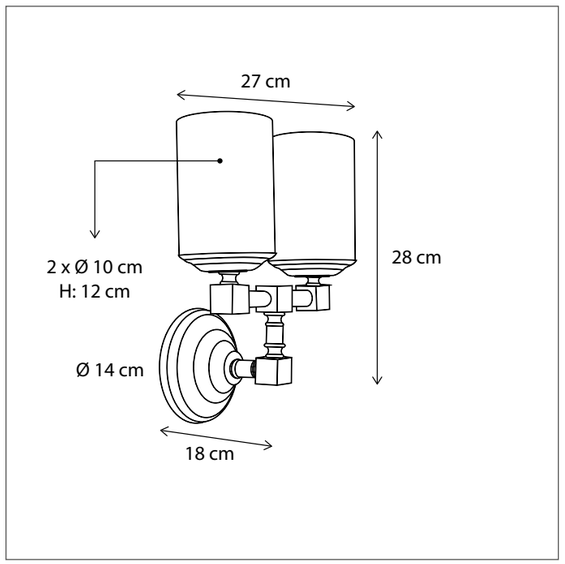

CODE	TYPE	FINISH	WATT	VOLT	FITTING
BCH001W10	Bellefeu® chandelier wall - 1 candle wax	Bronze	2,4	230	-
BCH002W20	Bellefeu® chandelier wall - 2 candles wax	Bronze	2 x 2,4	230	-
BCH003W37	Bellefeu® chandelier wall - 3 candles wax	Bronze	3 x 2,4	230	-
BCH101W10	Bellefeu® chandelier wall - 1 candle wax	Brushed nickel	2,4	230	-
BCH102W20	Bellefeu® chandelier wall - 2 candles wax	Brushed nickel	2 x 2,4	230	-
BCH103W37	Bellefeu® chandelier wall - 3 candles wax	Brushed nickel	3 x 2,4	230	-
BCH201W10	Bellefeu® chandelier wall - 1 candle wax	Chrome	2,4	230	-
BCH202W20	Bellefeu® chandelier wall - 2 candles wax	Chrome	2 x 2,4	230	-
BCH203W37	Bellefeu® chandelier wall - 3 candles wax	Chrome	3 x 2,4	230	-

See next page for more models.

Contact us for:

Customization & connectivity

BELLEFEU® CHANDELIER

WALL

CODE	TYPE	FINISH	WATT	VOLT	FITTING
BAH001W10	Bellefeu® chandelier wall - 1 candle alabaster	Bronze	2,4	230	-
BAH002W20	Bellefeu® chandelier wall - 2 candles alabaster	Bronze	2 x 2,4	230	-
BAH003W37	Bellefeu® chandelier wall - 3 candles alabaster	Bronze	3 x 2,4	230	-
BAH101W10	Bellefeu® chandelier wall - 1 candle alabaster	Brushed nickel	2,4	230	-
BAH102W20	Bellefeu® chandelier wall - 2 candles alabaster	Brushed nickel	2 x 2,4	230	-
BAH103W37	Bellefeu® chandelier wall - 3 candles alabaster	Brushed nickel	3 x 2,4	230	-
BAH201W10	Bellefeu® chandelier wall - 1 candle alabaster	Chrome	2,4	230	-
BAH202W20	Bellefeu® chandelier wall - 2 candles alabaster	Chrome	2 x 2,4	230	-
BAH203W37	Bellefeu® chandelier wall - 3 candles alabaster	Chrome	3 x 2,4	230	-

Contact us for:

Customization & connectivity

SCAN & DISCOVER

THE BELLEFEU EFFECT

INDOOR I WALL I BELLEFEU®

Authentage Catalogus 2024 Authentage Katalogus 2024 Authentage Catalogue 2024 Authentage Katalog 2024 Authentage Verlichting Authentage Lighting Authentage éclairage Authentage Beleuchtung
Authentage Webshop Authentage Verlichting Authentage Armaturen Authentage Winkels Authentage Verkooppunten Authentage Verdelers Authentage Verdeelpunten Authentage België Authentage Nederland Authentage Vente en Ligne Authentage Boutique Vente en Ligne Authentage Luminaires Authentage éclairage
Authentage Revendeurs Authentage Points de vente Authentage Magasins Authentage Boutiques Authentage Points de distribution Authentage France Authentage Lighting Authentage Retailers Authentage Dealers Authentage Distributors Authentage Points of sale Authentage Resellers Authentage England
Authentage Beleuchtung Authent Beleuchtung Authentage Leuchten Authentage Händler Authentage Shops Authentage Verkaufsstellen Authentage Vertriebspartner Authentage Deutschland Authentage E-shop Authentage Geschäfte Authentage Vertriebsstellen

www.Bcosy.be - Waarschoot - België - Belgique - Belgium - Belgien tel 0032 (0) 9 378 24 30 Mail: info@bcosy.be

VITRINE PETITE LINESTRA

WALL

IP 40

Lamps not included, consult light source guide for our advice.



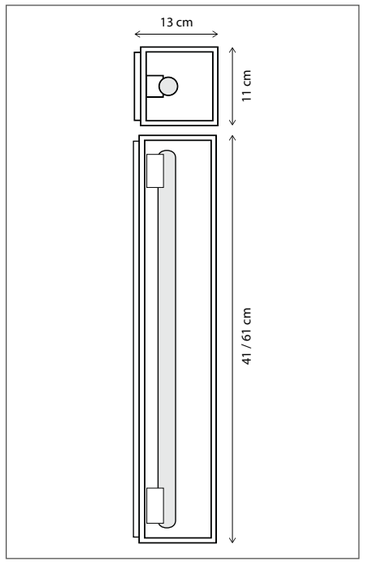

CODE	TYPE	FINISH	WATT	VOLT	FITTING
VIS001200	Vitrine petite linestra small wall	Bronze	15	230	S14D
VIS001201	Vitrine petite linestra medium wall	Bronze	15	230	S14S
VIS101200	Vitrine petite linestra small wall	Brushed nickel	15	230	S14D
VIS101201	Vitrine petite linestra medium wall	Brushed nickel	15	230	S14S
VIS201200	Vitrine petite linestra small wall	Chrome	15	230	S14D
VIS201201	Vitrine petite linestra medium wall	Chrome	15	230	S14S

Contact us for:
Customization & connectivity

VITRINE SMALL

WALL

IP 43

Lamps not included, consult light source guide for our advice.

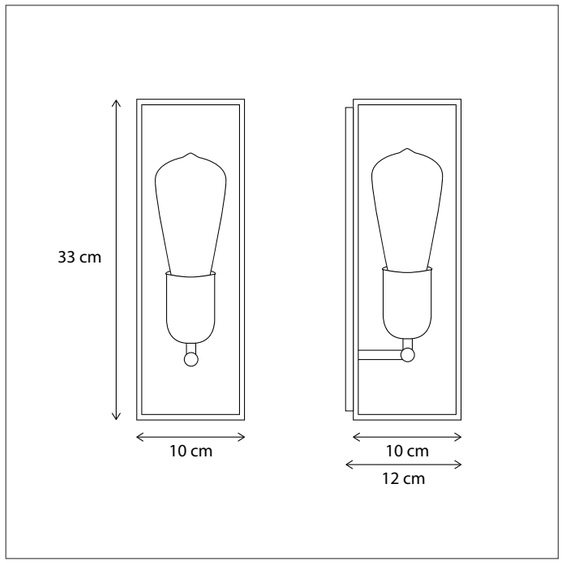



CODE	TYPE	FINISH	WATT	VOLT	FITTING
VIT001007	Vitrine wall small 1L	Bronze	15	230	E27
VIT101007	Vitrine wall small 1L	Brushed nickel	15	230	E27
VIT201007	Vitrine wall small 1L	Chrome	15	230	E27
VIT301007	Vitrine wall small 1L	Polished brass	15	230	E27

Contact us for:
Customization & connectivity

INDOOR I WALL I VITRINE

Authentage Catalogus 2024 Authentage Katalogus 2024 Authentage Catalogue 2024 Authentage Katalog 2024 Authentage Verlichting Authentage Lighting Authentage éclairage Authentage Beleuchtung
Authentage Webshop Authentage Verlichting Authentage Armaturen Authentage Winkels Authentage Verkooppunten Authentage Verdelers Authentage Verdeelpunten Authentage België Authentage Nederland Authentage Vente en Ligne Authentage Boutique Vente en Ligne Authentage Luminaires Authentage éclairage
Authentage Revendeurs Authentage Points de vente Authentage Magasins Authentage Boutiques Authentage Points de distribution Authentage France Authentage Lighting Authentage Retailers Authentage Dealers Authentage Distributors Authentage Points of sale Authentage Resellers Authentage England
Authentage Beleuchtung Authent Beleuchtung Authentage Leuchten Authentage Händler Authentage Shops Authentage Verkaufsstellen Authentage Vertriebspartner Authentage Deutschland Authentage E-shop Authentage Geschäfte Authentage Vertriebsstellen

www.Bcosy.be - Waarschoot - België - Belgique - Belgium - Belgien tel 0032 (0) 9 378 24 30 Mail: info@bcosy.be

VITRINE NORMAL

WALL

Lamps not included, consult light source guide for our advice.



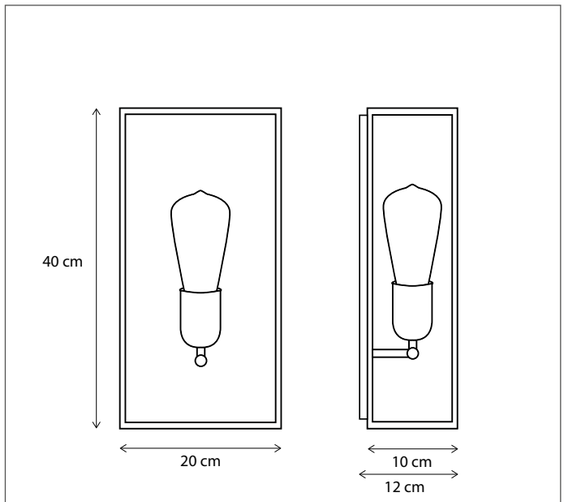

CODE	TYPE	FINISH	WATT	VOLT	FITTING
VIT001002	Vitrine wall normal 1L	Bronze	15	230	E27
VIT101002	Vitrine wall normal 1L	Brushed nickel	15	230	E27
VIT201002	Vitrine wall normal 1L	Chrome	15	230	E27
VIT301002	Vitrine wall normal 1L	Polished brass	15	230	E27

Contact us for:

Customization & connectivity

VITRINE LARGE

WALL

Lamps not included, consult light source guide for our advice.

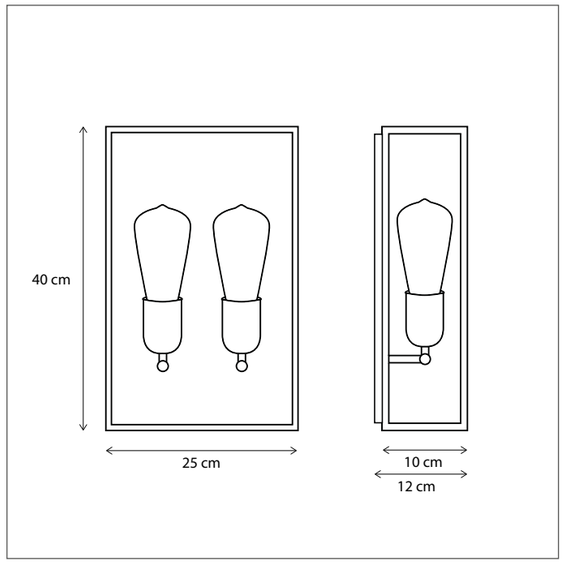



CODE	TYPE	FINISH	WATT	VOLT	FITTING
VIT002008	Vitrine wall large 2L	Bronze	2 x 15	230	E27
VIT102008	Vitrine wall large 2L	Brushed nickel	2 x 15	230	E27
VIT202008	Vitrine wall large 2L	Chrome	2 x 15	230	E27
VIT302008	Vitrine wall large 2L	Polished brass	2 x 15	230	E27

Contact us for:

Customization & connectivity

INDOOR I WALL I VITRINE

Authentage Catalogus 2024 Authentage Katalogus 2024 Authentage Catalogue 2024 Authentage Katalog 2024 Authentage Verlichting Authentage Lighting Authentage éclairage Authentage Beleuchtung
Authentage Webshop Authentage Verlichting Authentage Armaturen Authentage Winkels Authentage Verkooppunten Authentage Verdelers Authentage Verdeelpunten Authentage België Authentage Nederland Authentage Vente en Ligne Authentage Boutique Vente en Ligne Authentage Luminaires Authentage éclairage
Authentage Revendeurs Authentage Points de vente Authentage Magasins Authentage Boutiques Authentage Points de distribution Authentage France Authentage Lighting Authentage Retailers Authentage Dealers Authentage Distributors Authentage Points of sale Authentage Resellers Authentage England
Authentage Beleuchtung Authent Beleuchtung Authentage Leuchten Authentage Händler Authentage Shops Authentage Verkaufsstellen Authentage Vertriebspartner Authentage Deutschland Authentage E-shop Authentage Geschäfte Authentage Vertriebsstellen

www.Bcosy.be - Waarschoot - België - Belgique - Belgium - Belgien tel 0032 (0) 9 378 24 30 Mail: info@bcosy.be

VITRINE CENTONZE

WALL

IP 43 DI

Lamps not included, consult light source guide for our advice.



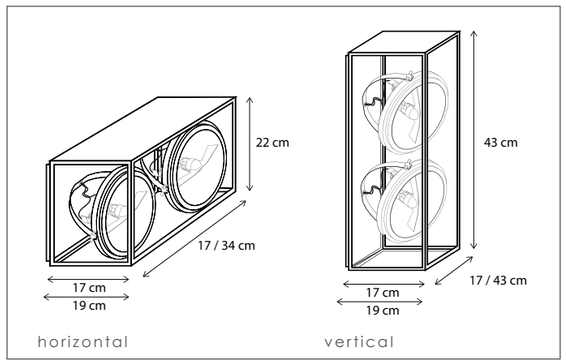

CODE	TYPE	FINISH	WATT	VOLT	FITTING
VIT001004	Vitrine wall centonze 1L horizontal 17 x 22 cm	Bronze	12	230	G53
VIT002004	Vitrine wall centonze 2L horizontal 34 x 22 cm	Bronze	2 x 12	230	G53
VIT002005	Vitrine wall centonze 2L vertical 17 x 43 cm	Bronze	2 x 12	230	G53
VIT004009	Vitrine wall centonze 4L vertical 43 x 43 cm	Bronze	4 x 12	230	G53
VIT102004	Vitrine wall centonze 1L horizontal 17 x 22 cm	Brushed nickel	12	230	G53
VIT101004	Vitrine wall centonze 2L horizontal 34 x 22 cm	Brushed nickel	2 x12	230	G53
VIT102005	Vitrine wall centonze 2L vertical 17 x 43 cm	Brushed nickel	2 x 12	230	G53
VIT104009	Vitrine wall centonze 4L vertical 43 x 43 cm	Brushed nickel	4 x 12	230	G53
VIT201004	Vitrine wall centonze 1L horizontal 17 x 22 cm	Chrome	12	230	G53
VIT202004	Vitrine wall centonze 2L horizontal 34 x 22 cm	Chrome	2 x 12	230	G53
VIT202005	Vitrine wall centonze 2L vertical 17 x 43 cm	Chrome	2 x 12	230	G53
VIT204009	Vitrine wall centonze 4L vertical 43 x 43 cm	Chrome	4 x 12	230	G53

SCAN & DISCOVER
OUR PATENTED KELVIN KILLER®

Contact us for:
Customization & connectivity

VITRINE UP & DOWN

WALL

IP 43 DI

Lamps not included, consult light source guide for our advice.

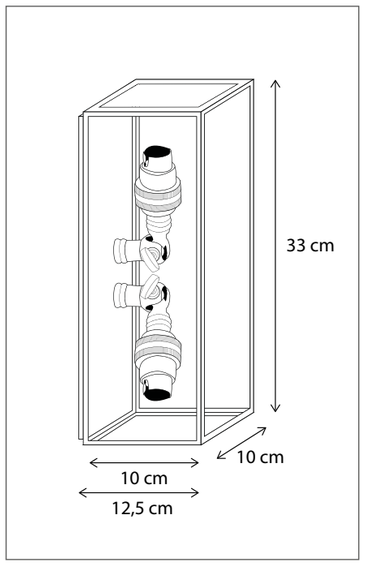



CODE	TYPE	FINISH	WATT	VOLT	FITTING
VIT002010	Vitrine up & down marron	Bronze	2 x 8	230	BA15d
VIT102010	Vitrine up & down marron	Brushed nickel	2 x 8	230	BA15d
VIT202010	Vitrine up & down marron	Chrome	2 x 8	230	BA15d

Contact us for:
Customization & connectivity

INDOOR I WALL I VITRINE

Authentage Catalogus 2024 Authentage Katalogus 2024 Authentage Catalogue 2024 Authentage Katalog 2024 Authentage Verlichting Authentage Lighting Authentage éclairage Authentage Beleuchtung
Authentage Webshop Authentage Verlichting Authentage Armaturen Authentage Winkels Authentage Verkooppunten Authentage Verdelers Authentage Verdeelpunten Authentage België Authentage Nederland Authentage Vente en Ligne Authentage Boutique Vente en Ligne Authentage Luminaires Authentage éclairage
Authentage Revendeurs Authentage Points de vente Authentage Magasins Authentage Boutiques Authentage Points de distribution Authentage France Authentage Lighting Authentage Retailers Authentage Dealers Authentage Distributors Authentage Points of sale Authentage Resellers Authentage England
Authentage Beleuchtung Authent Beleuchtung Authentage Leuchten Authentage Händler Authentage Shops Authentage Verkaufsstellen Authentage Vertriebspartner Authentage Deutschland Authentage E-shop Authentage Geschäfte Authentage Vertriebsstellen

www.Bcosy.be - Waarschoot - België - Belgique - Belgium - Belgien tel 0032 (0) 9 378 24 30 Mail: info@bcosy.be

ALB

WALL

IP 20

2 integrated LED-strips:
1. Integrated in brushed brass tube
2. Behind alabaster disc



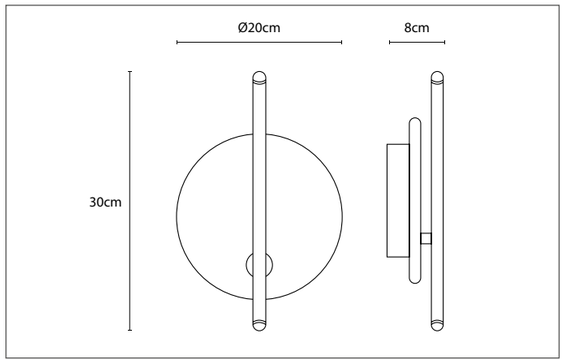

CODE	TYPE	FINISH	WATT	VOLT	FITTING
MAT420ALB	Alb matisse Wall	Albaster & Brushed brass	10	230	-

Contact us for:

Customization & connectivity



Authentage Catalogus 2024 Authentage Katalogus 2024 Authentage Catalogue 2024 Authentage Katalog 2024 Authentage Verlichting Authentage Lighting Authentage éclairage Authentage Beleuchtung
Authentage Webshop Authentage Verlichting Authentage Armaturen Authentage Winkels Authentage Verkooppunten Authentage Verdelers Authentage Verdeelpunten Authentage België Authentage Nederland Authentage Vente en Ligne Authentage Boutique Vente en Ligne Authentage Luminaires Authentage éclairage
Authentage Revendeurs Authentage Points de vente Authentage Magasins Authentage Boutiques Authentage Points de distribution Authentage France Authentage Lighting Authentage Retailers Authentage Dealers Authentage Distributors Authentage Points of sale Authentage Resellers Authentage England
Authentage Beleuchtung Authent Beleuchtung Authentage Leuchten Authentage Händler Authentage Shops Authentage Verkaufsstellen Authentage Vertriebspartner Authentage Deutschland Authentage E-shop Authentage Geschäfte Authentage Vertriebsstellen

www.Bcosy.be - Waarschoot - België - Belgique - Belgium - Belgien tel 0032 (0) 9 378 24 30 Mail: info@bcosy.be

BALUME

WALL

IP 43

For warmer light, add Kelvin Killer® - see p 474.
Lamps not included, consult light source guide for our advice.



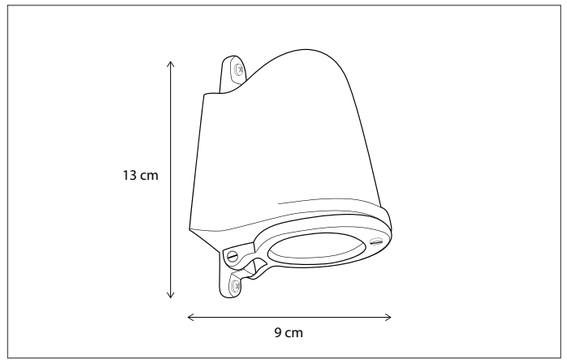

CODE	TYPE	FINISH	WATT	VOLT	FITTING
BAL001002	Balume wall	Bronze	8	230	GU10
BAL101002	Balume wall	Brushed nickel	8	230	GU10
BAL201002	Balume wall	Chrome	8	230	GU10
BAL301002	Balume wall	Polished brass	8	230	GU10

Contact us for:
Customization & connectivity

BALUME UP & DOWN

WALL

IP 20

For warmer light, add Kelvin Killer® - see p 474.
Lamps not included, consult light source guide for our advice.

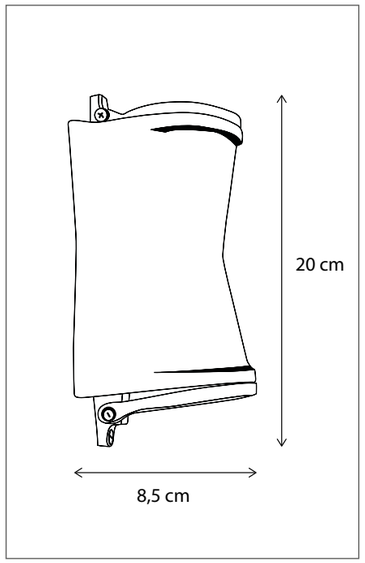



CODE	TYPE	FINISH	WATT	VOLT	FITTING
BAL002UD1	Balume up & down	Bronze	2 x 8	230	GU10
BAL102UD1	Balume up & down	Brushed nickel	2 x 8	230	GU10
BAL202UD1	Balume up & down	Chrome	2 x 8	230	GU10

Contact us for:
Customization & connectivity

INDOOR I WALL I BALUME

Authentage Catalogus 2024 Authentage Katalogus 2024 Authentage Catalogue 2024 Authentage Katalog 2024 Authentage Verlichting Authentage Lighting Authentage éclairage Authentage Beleuchtung
Authentage Webshop Authentage Verlichting Authentage Armaturen Authentage Winkels Authentage Verkooppunten Authentage Verdelers Authentage Verdeelpunten Authentage België Authentage Nederland Authentage Vente en Ligne Authentage Boutique Vente en Ligne Authentage Luminaires Authentage éclairage
Authentage Revendeurs Authentage Points de vente Authentage Magasins Authentage Boutiques Authentage Points de distribution Authentage France Authentage Lighting Authentage Retailers Authentage Dealers Authentage Distributors Authentage Points of sale Authentage Resellers Authentage England
Authentage Beleuchtung Authent Beleuchtung Authentage Leuchten Authentage Händler Authentage Shops Authentage Verkaufsstellen Authentage Vertriebspartner Authentage Deutschland Authentage E-shop Authentage Geschäfte Authentage Vertriebsstellen

www.Bcosy.be - Waarschoot - België - Belgique - Belgium - Belgien tel 0032 (0) 9 378 24 30 Mail: info@bcosy.be

IP 20

Lamps not included. Consult light source guide for our advice.

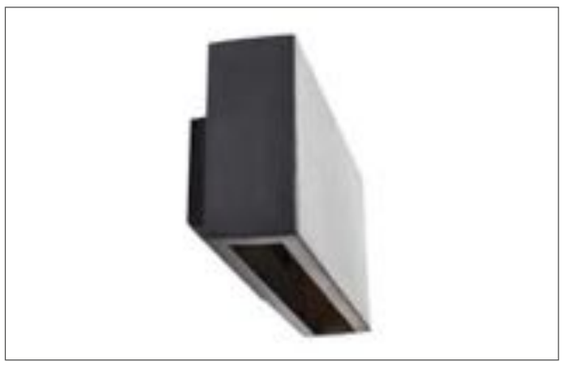

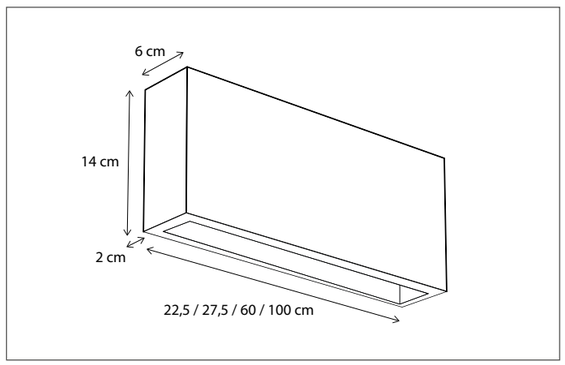

CODE	TYPE	FINISH	WATT	VOLT	FITTING
QBR001005	Q-Bri wall small 22,5 cm	Bronze	10	230	R7S
QBR001002	Q-Bri wall normal 27,5 cm	Bronze	10	230	R7S
QBR002007	Q-Bri wall medium 60 cm	Bronze	2 x 10	230	R7S
QBR003006	Q-Bri wall large 100 cm	Bronze	3 x 10	230	R7S
QBR101005	Q-Bri wall small 22,5 cm	Brushed nickel	10	230	R7S
QBR101002	Q-Bri wall normal 27,5 cm	Brushed nickel	10	230	R7S
QBR102007	Q-Bri wall medium 60 cm	Brushed nickel	2 x 10	230	R7S
QBR103006	Q-Bri wall large 100 cm	Brushed nickel	3 x 10	230	R7S
QBR201005	Q-Bri wall small 22,5 cm	Chrome	10	230	R7S
QBR201002	Q-Bri wall normal 27,5 cm	Chrome	10	230	R7S
QBR202007	Q-Bri wall medium 60 cm	Chrome	2 x 10	230	R7S

Contact us for:
Customization & connectivity

Q-BRI

WALL

CODE	TYPE	FINISH	WATT	VOLT	FITTING
QBR203006	Q-Bri wall large 100 cm	Chrome	3 x 10	230	R7S
QBR901005	Q-Bri wall small 22,5 cm	Ready for painting	10	230	R7S
QBR901002	Q-Bri wall normal 27,5 cm	Ready for painting	10	230	R7S
QBR902007	Q-Bri wall medium 60 cm	Ready for painting	2 x 10	230	R7S
QBR903006	Q-Bri wall large 100 cm	Ready for painting	3 x 10	230	R7S

Contact us for:
Customization & connectivity

INDOOR I WALL I Q-BRI

Authentage Catalogus 2024 Authentage Katalogus 2024 Authentage Catalogue 2024 Authentage Katalog 2024 Authentage Verlichting Authentage Lighting Authentage éclairage Authentage Beleuchtung
Authentage Webshop Authentage Verlichting Authentage Armaturen Authentage Winkels Authentage Verkooppunten Authentage Verdelers Authentage Verdeelpunten Authentage België Authentage Nederland Authentage Vente en Ligne Authentage Boutique Vente en Ligne Authentage Luminaires Authentage éclairage
Authentage Revendeurs Authentage Points de vente Authentage Magasins Authentage Boutiques Authentage Points de distribution Authentage France Authentage Lighting Authentage Retailers Authentage Dealers Authentage Distributors Authentage Points of sale Authentage Resellers Authentage England
Authentage Beleuchtung Authent Beleuchtung Authentage Leuchten Authentage Händler Authentage Shops Authentage Verkaufsstellen Authentage Vertriebspartner Authentage Deutschland Authentage E-shop Authentage Geschäfte Authentage Vertriebsstellen

www.Bcosy.be - Waarschoot - België - Belgique - Belgium - Belgien tel 0032 (0) 9 378 24 30 Mail: info@bcosy.be

Q-BRI LANTERN

WALL

2 integrated LED-strips 2700K (top and bottom).
The light reflects on the polished brass inside, resulting in a warm glow.



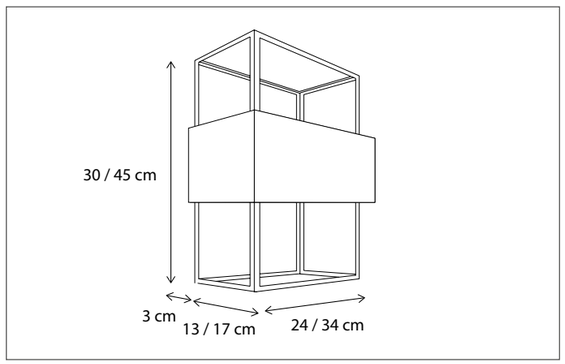

CODE	TYPE	FINISH	WATT	VOLT	FITTING
QLW0L2IN2	Q-Bri lantern wall normal	Bronze	15	230	-
QLW0L2IN3	Q-Bri lantern wall large	Bronze	24	230	-

Contact us for:
Customization & connectivity

MATISSE

WALL

Integrated LED (2500K)

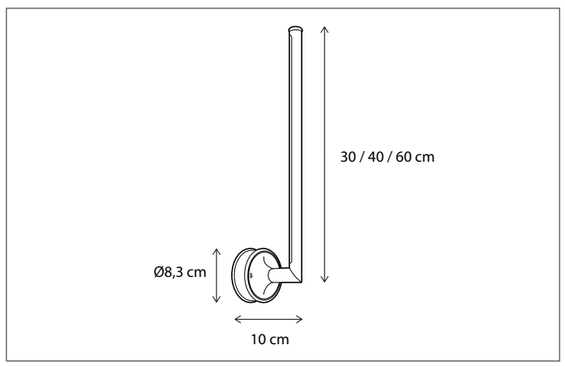



CODE	TYPE	FINISH	WATT	VOLT	FITTING
MAT025UP3	Matisse wall up 30 cm	Bronze	2,8	230	-
MAT025UP4	Matisse wall up 40 cm	Bronze	4,2	230	-
MAT025UP6	Matisse wall up 60 cm	Bronze	7	230	-
MAT125UP3	Matisse wall up 30 cm	Brushed nickel	2,8	230	-
MAT125UP4	Matisse wall up 40 cm	Brushed nickel	4,2	230	-
MAT125UP6	Matisse wall up 60 cm	Brushed nickel	7	230	-
MAT225UP3	Matisse wall up 30 cm	Chrome	2,8	230	-
MAT225UP4	Matisse wall up 40 cm	Chrome	4,2	230	-
MAT225UP6	Matisse wall up 60 cm	Chrome	7	230	-
MAT325UP3	Matisse wall up 30 cm	Polished brass	2,8	230	-
MAT325UP4	Matisse wall up 40 cm	Polished brass	4,2	230	-
MAT325UP6	Matisse wall up 60 cm	Polished brass	7	230	-

Contact us for:
Customization & connectivity

Authentage Catalogus 2024 Authentage Katalogus 2024 Authentage Catalogue 2024 Authentage Katalog 2024 Authentage Verlichting Authentage Lighting Authentage éclairage Authentage Beleuchtung
Authentage Webshop Authentage Verlichting Authentage Armaturen Authentage Winkels Authentage Verkooppunten Authentage Verdelers Authentage Verdeelpunten Authentage België Authentage Nederland Authentage Vente en Ligne Authentage Boutique Vente en Ligne Authentage Luminaires Authentage éclairage
Authentage Revendeurs Authentage Points de vente Authentage Magasins Authentage Boutiques Authentage Points de distribution Authentage France Authentage Lighting Authentage Retailers Authentage Dealers Authentage Distributors Authentage Points of sale Authentage Resellers Authentage England
Authentage Beleuchtung Authent Beleuchtung Authentage Leuchten Authentage Händler Authentage Shops Authentage Verkaufsstellen Authentage Vertriebspartner Authentage Deutschland Authentage E-shop Authentage Geschäfte Authentage Vertriebsstellen

www.Bcosy.be - Waarschoot - België - Belgique - Belgium - Belgien tel 0032 (0) 9 378 24 30 Mail: info@bcosy.be

MICRO
MOUNTED BASE

WALL

IP 55

For warmer light, add Kelvin Killer® see p474.
For enhanced light dispersion or anti-glare effect, add frosted glass filter see p474.
Lamps not included, consult light source guide for our advice.



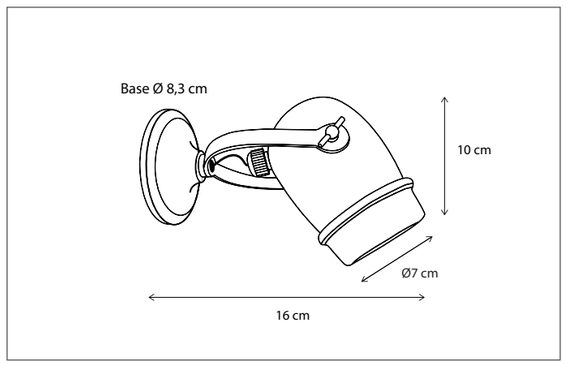

CODE	TYPE	FINISH	WATT	VOLT	FITTING
MIC001G83	Micro wall mounted base	Bronze	6	230	GU10
MIC101G83	Micro wall mounted base	Brushed nickel	6	230	GU10
MIC201G83	Micro wall mounted base	Chrome	6	230	GU10

SCAN & DISCOVER
OUR PATENTED KELVIN KILLER®

Contact us for:
Customization & connectivity

MICRO ON
ROUND BASE

WALL

IP 55

For warmer light, add Kelvin Killer® see p474.
For enhanced light dispersion or anti-glare effect, add frosted glass filter see p474.
Lamps not included, consult light source guide for our advice.

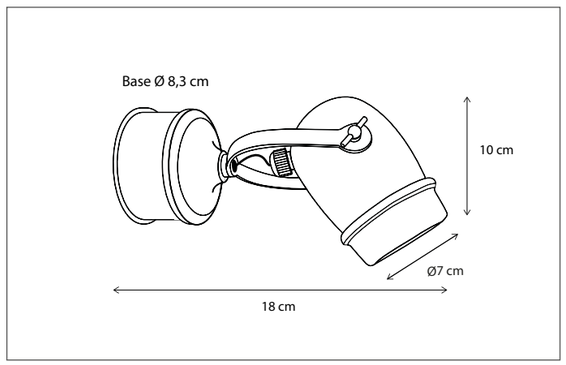



CODE	TYPE	FINISH	WATT	VOLT	FITTING
MIC001006	Micro wall on round base	Bronze	6	230	GU10
MIC101006	Micro wall on round base	Brushed nickel	6	230	GU10
MIC201006	Micro wall on round base	Chrome	6	230	GU10

Contact us for:
Customization & connectivity

INDOOR I WALL I MICRO

Authentage Catalogus 2024 Authentage Katalogus 2024 Authentage Catalogue 2024 Authentage Katalog 2024 Authentage Verlichting Authentage Lighting Authentage éclairage Authentage Beleuchtung
Authentage Webshop Authentage Verlichting Authentage Armaturen Authentage Winkels Authentage Verkooppunten Authentage Verdelers Authentage Verdeelpunten Authentage België Authentage Nederland Authentage Vente en Ligne Authentage Boutique Vente en Ligne Authentage Luminaires Authentage éclairage
Authentage Revendeurs Authentage Points de vente Authentage Magasins Authentage Boutiques Authentage Points de distribution Authentage France Authentage Lighting Authentage Retailers Authentage Dealers Authentage Distributors Authentage Points of sale Authentage Resellers Authentage England
Authentage Beleuchtung Authent Beleuchtung Authentage Leuchten Authentage Händler Authentage Shops Authentage Verkaufsstellen Authentage Vertriebspartner Authentage Deutschland Authentage E-shop Authentage Geschäfte Authentage Vertriebsstellen

www.Bcosy.be - Waarschoot - België - Belgique - Belgium - Belgien tel 0032 (0) 9 378 24 30 Mail: info@bcosy.be

MICRO UP & DOWN MOUNTED BASE

WALL

IP 55

For warmer light, add Kelvin Killer® see p474.
For enhanced light dispersion or anti-glare effect, add frosted glass filter see p474.
Lamps not included, consult light source guide for our advice.



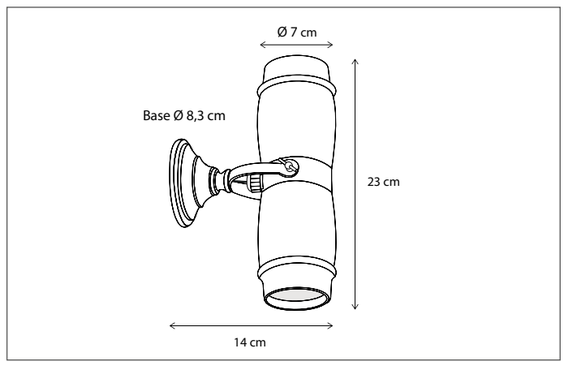

CODE	TYPE	FINISH	WATT	VOLT	FITTING
MIC002001	Micro up & down mounted base	Bronze	2 x 6	230	GU10
MIC102001	Micro up & down mounted base	Brushed nickel	2 x 6	230	GU10
MIC202001	Micro up & down mounted base	Chrome	2 x 6	230	GU10

SCAN & DISCOVER
OUR PATENTED KELVIN KILLER®

Contact us for:
Customization & connectivity

MICRO UP & DOWN ON ROUND BASE

WALL

IP 55

DALI

For warmer light, add Kelvin Killer® see p474.
For enhanced light dispersion or anti-glare effect, add frosted glass filter see p474.
Lamps not included, consult light source guide for our advice.

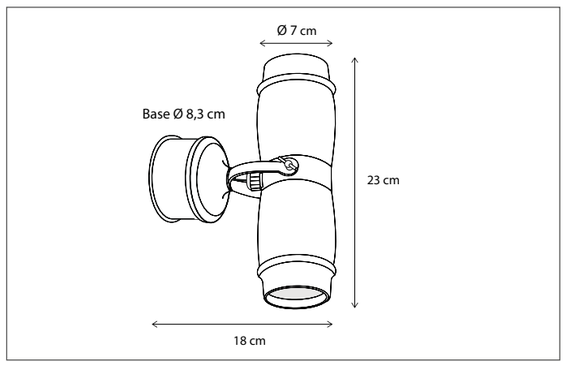



CODE	TYPE	FINISH	WATT	VOLT	FITTING
MIC002006	Micro up & down on round base	Bronze	2 x 6	230	GU10
MIC102006	Micro up & down on round base	Brushed nickel	2 x 6	230	GU10
MIC202006	Micro up & down on round base	Chrome	2 x 6	230	GU10

Contact us for:
Customization & connectivity

INDOOR I WALL I MICRO

Authentage Catalogus 2024 Authentage Katalogus 2024 Authentage Catalogue 2024 Authentage Katalog 2024 Authentage Verlichting Authentage Lighting Authentage éclairage Authentage Beleuchtung
Authentage Webshop Authentage Verlichting Authentage Armaturen Authentage Winkels Authentage Verkooppunten Authentage Verdelers Authentage Verdeelpunten Authentage België Authentage Nederland Authentage Vente en Ligne Authentage Boutique Vente en Ligne Authentage Luminaires Authentage éclairage
Authentage Revendeurs Authentage Points de vente Authentage Magasins Authentage Boutiques Authentage Points de distribution Authentage France Authentage Lighting Authentage Retailers Authentage Dealers Authentage Distributors Authentage Points of sale Authentage Resellers Authentage England
Authentage Beleuchtung Authent Beleuchtung Authentage Leuchten Authentage Händler Authentage Shops Authentage Verkaufsstellen Authentage Vertriebspartner Authentage Deutschland Authentage E-shop Authentage Geschäfte Authentage Vertriebsstellen

www.Bcosy.be - Waarschoot - België - Belgique - Belgium - Belgien tel 0032 (0) 9 378 24 30 Mail: info@bcosy.be

MICRO ON PROFILE

WALL

IP 55

For warmer light, add Kelvin Killer® see p474.
For enhanced light dispersion or anti-glare effect, add frosted glass filter see p474.
Lamps not included, consult light source guide for our advice.



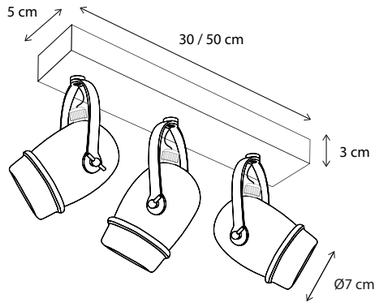

CODE	TYPE	FINISH	WATT	VOLT	FITTING
MIC002B03	Micro on profile 30 cm - 2L	Bronze	2 x 6	230	GU10
MIC003B05	Micro on profile 50 cm - 3L	Bronze	3 x 6	230	GU10
MIC102B03	Micro on profile 30 cm - 2L	Brushed nickel	2 x 6	230	GU10
MIC103B05	Micro on profile 50 cm - 3L	Brushed nickel	3 x 6	230	GU10
MIC202B03	Micro on profile 30 cm - 2L	Chrome	2 x 6	230	GU10
MIC203B05	Micro on profile 50 cm - 3L	Chrome	3 x 6	230	GU10

SCAN & DISCOVER
OUR PATENTED KELVIN KILLER®

Contact us for:
Customization & connectivity



Authentage Catalogus 2024 Authentage Katalogus 2024 Authentage Catalogue 2024 Authentage Katalog 2024 Authentage Verlichting Authentage Lighting Authentage éclairage Authentage Beleuchtung
Authentage Webshop Authentage Verlichting Authentage Armaturen Authentage Winkels Authentage Verkooppunten Authentage Verdelers Authentage Verdeelpunten Authentage België Authentage Nederland Authentage Vente en Ligne Authentage Boutique Vente en Ligne Authentage Luminaires Authentage éclairage
Authentage Revendeurs Authentage Points de vente Authentage Magasins Authentage Boutiques Authentage Points de distribution Authentage France Authentage Lighting Authentage Retailers Authentage Dealers Authentage Distributors Authentage Points of sale Authentage Resellers Authentage England
Authentage Beleuchtung Authent Beleuchtung Authentage Leuchten Authentage Händler Authentage Shops Authentage Verkaufsstellen Authentage Vertriebspartner Authentage Deutschland Authentage E-shop Authentage Geschäfte Authentage Vertriebsstellen

www.Bcosy.be - Waarschoot - België - Belgique - Belgium - Belgien tel 0032 (0) 9 378 24 30 Mail: info@bcosy.be

MACRO MOUNTED BASE

WALL

For warmer light, add Kelvin Killer® - see p 474.
Lamps not included, consult light source guide for our advice.



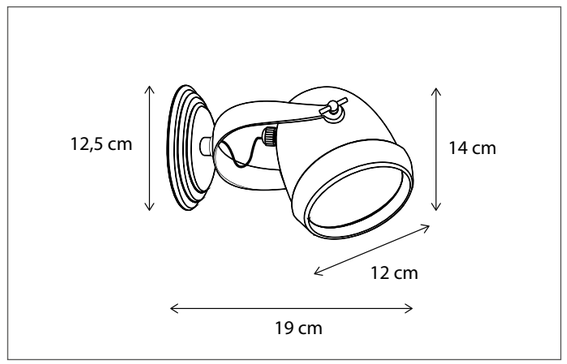

CODE	TYPE	FINISH	WATT	VOLT	FITTING
MAC001A12	Macro wall	Bronze	12	12	G53
MAC101A12	Macro wall	Brushed nickel	12	12	G53
MAC201A12	Macro wall	Chrome	12	12	G53

MACRO ON ROUND BASE

WALL

For warmer light, add Kelvin Killer® - see p 474.
Lamps not included, consult light source guide for our advice.

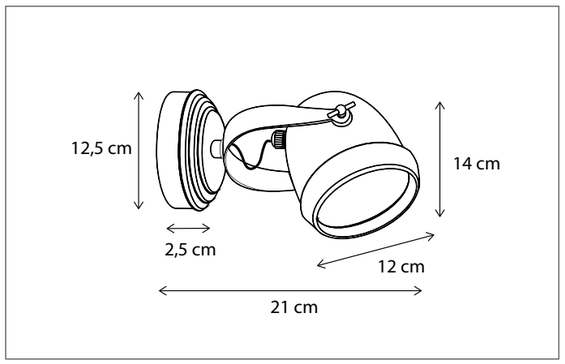



CODE	TYPE	FINISH	WATT	VOLT	FITTING
MAC001A22	Macro wall (driver incl.)	Bronze	12	230	G53
MAC101A22	Macro wall (driver incl.)	Brushed nickel	12	230	G53
MAC201A22	Macro wall (driver incl.)	Chrome	12	230	G53

SCAN & DISCOVER
OUR PATENTED KELVIN KILLER®

Contact us for:
Customization & connectivity

Contact us for:
Customization & connectivity

INDOOR I WALL I MACRO

Authentage Catalogus 2024 Authentage Katalogus 2024 Authentage Catalogue 2024 Authentage Katalog 2024 Authentage Verlichting Authentage Lighting Authentage éclairage Authentage Beleuchtung
Authentage Webshop Authentage Verlichting Authentage Armaturen Authentage Winkels Authentage Verkooppunten Authentage Verdelers Authentage Verdeelpunten Authentage België Authentage Nederland Authentage Vente en Ligne Authentage Boutique Vente en Ligne Authentage Luminaires Authentage éclairage
Authentage Revendeurs Authentage Points de vente Authentage Magasins Authentage Boutiques Authentage Points de distribution Authentage France Authentage Lighting Authentage Retailers Authentage Dealers Authentage Distributors Authentage Points of sale Authentage Resellers Authentage England
Authentage Beleuchtung Authent Beleuchtung Authentage Leuchten Authentage Händler Authentage Shops Authentage Verkaufsstellen Authentage Vertriebspartner Authentage Deutschland Authentage E-shop Authentage Geschäfte Authentage Vertriebsstellen

www.Bcosy.be - Waarschoot - België - Belgique - Belgium - Belgien tel 0032 (0) 9 378 24 30 Mail: info@bcosy.be

MACRO
ON PROFILE

WALL

IP 55

For warmer light, add Kelvin Killer® - see p 474.
Lamps not included, consult light source guide for our advice.



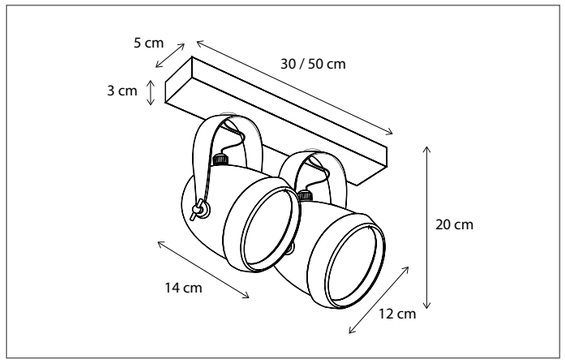

CODE	TYPE	FINISH	WATT	VOLT	FITTING
MAC002P22	Macro on profile 30 cm - 2L	Bronze	2 x 12	230	G53
MAC003P22	Macro on profile 50 cm - 3L	Bronze	3 x 12	230	G53
MAC102P22	Macro on profile 30 cm - 2L	Brushed nickel	2 x 12	230	G53
MAC103P22	Macro on profile 50 cm - 3L	Brushed nickel	3 x 12	230	G53
MAC202P22	Macro on profile 30 cm - 2L	Chrome	2 x 12	230	G53
MAC203P22	Macro on profile 50 cm - 3L	Chrome	3 x 12	230	G53

SCAN & DISCOVER
OUR PATENTED KELVIN KILLER®

Contact us for:
Customization & connectivity

Authentage Catalogus 2024 Authentage Katalogus 2024 Authentage Catalogue 2024 Authentage Katalog 2024 Authentage Verlichting Authentage Lighting Authentage éclairage Authentage Beleuchtung
Authentage Webshop Authentage Verlichting Authentage Armaturen Authentage Winkels Authentage Verkooppunten Authentage Verdelers Authentage Verdeelpunten Authentage België Authentage Nederland Authentage Vente en Ligne Authentage Boutique Vente en Ligne Authentage Luminaires Authentage éclairage
Authentage Revendeurs Authentage Points de vente Authentage Magasins Authentage Boutiques Authentage Points de distribution Authentage France Authentage Lighting Authentage Retailers Authentage Dealers Authentage Distributors Authentage Points of sale Authentage Resellers Authentage England
Authentage Beleuchtung Authent Beleuchtung Authentage Leuchten Authentage Händler Authentage Shops Authentage Verkaufsstellen Authentage Vertriebspartner Authentage Deutschland Authentage E-shop Authentage Geschäfte Authentage Vertriebsstellen

www.Bcosy.be - Waarschoot - België - Belgique - Belgium - Belgien tel 0032 (0) 9 378 24 30 Mail: info@bcosy.be

TISSELUM

WALL

IP 20 | DI

Integrated LED.
The light reflects on polished mesh, resulting in a warm glow.



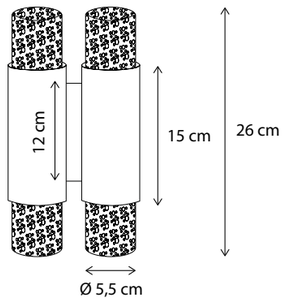

CODE	TYPE	FINISH	WATT	VOLT	FITTING
TIS001W01	Tisselum wall 1L	Bronze	2 x 2,4	230	-
TIS001W02	Tisselum wall 2L	Bronze	4 x 2,4	230	-

Contact us for:
Customization & connectivity

TUBELUM ON RECTANGULAR BASE

WALL

IP 20 | DALI

The light source is easy to move up and down, enabling you to change the light effect.
Inside is polished brass to create a warm glow.

Lamps not included, consult light source guide for our advice.

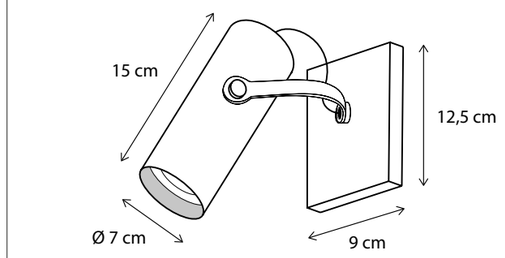



CODE	TYPE	FINISH	WATT	VOLT	FITTING
TBL001006	Tubelum wall on rectangular base	Bronze	8	230	GU10

Contact us for:
Customization & connectivity

Authentage Catalogus 2024 Authentage Katalogus 2024 Authentage Catalogue 2024 Authentage Katalog 2024 Authentage Verlichting Authentage Lighting Authentage éclairage Authentage Beleuchtung
Authentage Webshop Authentage Verlichting Authentage Armaturen Authentage Winkels Authentage Verkooppunten Authentage Verdelers Authentage Verdeelpunten Authentage België Authentage Nederland Authentage Vente en Ligne Authentage Boutique Vente en Ligne Authentage Luminaires Authentage éclairage
Authentage Revendeurs Authentage Points de vente Authentage Magasins Authentage Boutiques Authentage Points de distribution Authentage France Authentage Lighting Authentage Retailers Authentage Dealers Authentage Distributors Authentage Points of sale Authentage Resellers Authentage England
Authentage Beleuchtung Authent Beleuchtung Authentage Leuchten Authentage Händler Authentage Shops Authentage Verkaufsstellen Authentage Vertriebspartner Authentage Deutschland Authentage E-shop Authentage Geschäfte Authentage Vertriebsstellen

www.Bcosy.be - Waarschoot - België - Belgique - Belgium - Belgien tel 0032 (0) 9 378 24 30 Mail: info@bcosy.be

FILOU ON SQUARE BASE

WALL

IP 20

Lamps not included, consult light source guide for our advice.



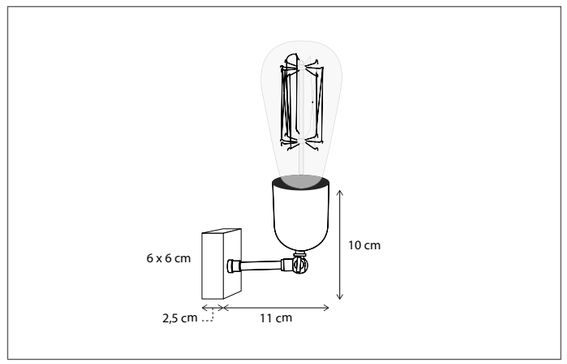

CODE	TYPE	FINISH	WATT	VOLT	FITTING
FIL001V60	Filou wall on square base	Bronze	15	230	E27
FIL101V60	Filou wall on square base	Brushed nickel	15	230	E27
FIL201V60	Filou wall on square base	Chrome	15	230	E27

Contact us for:

Customization & connectivity

FILOU ON ROUND BASE

WALL

IP 20

Lamps not included, consult light source guide for our advice.

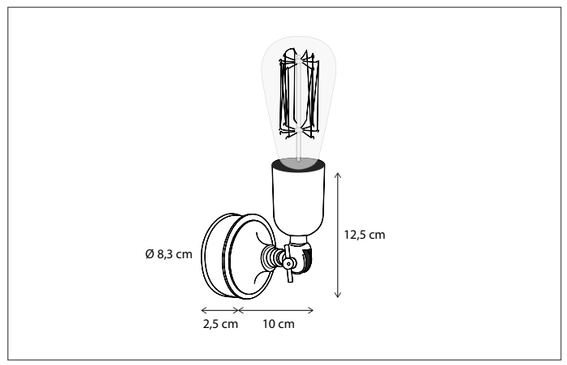



CODE	TYPE	FINISH	WATT	VOLT	FITTING
FIL001F83	Filou wall on round base	Bronze	15	230	E27
FIL101F83	Filou wall on round base	Brushed nickel	15	230	E27
FIL201F83	Filou wall on round base	Chrome	15	230	E27

Contact us for:

Customization & connectivity

INDOOR I WALL I FILOU

Authentage Catalogus 2024 Authentage Katalogus 2024 Authentage Catalogue 2024 Authentage Katalog 2024 Authentage Verlichting Authentage Lighting Authentage éclairage Authentage Beleuchtung
Authentage Webshop Authentage Verlichting Authentage Armaturen Authentage Winkels Authentage Verkooppunten Authentage Verdelers Authentage Verdeelpunten Authentage België Authentage Nederland Authentage Vente en Ligne Authentage Boutique Vente en Ligne Authentage Luminaires Authentage éclairage
Authentage Revendeurs Authentage Points de vente Authentage Magasins Authentage Boutiques Authentage Points de distribution Authentage France Authentage Lighting Authentage Retailers Authentage Dealers Authentage Distributors Authentage Points of sale Authentage Resellers Authentage England
Authentage Beleuchtung Authent Beleuchtung Authentage Leuchten Authentage Händler Authentage Shops Authentage Verkaufsstellen Authentage Vertriebspartner Authentage Deutschland Authentage E-shop Authentage Geschäfte Authentage Vertriebsstellen

www.Bcosy.be - Waarschoot - België - Belgique - Belgium - Belgien tel 0032 (0) 9 378 24 30 Mail: info@bcosy.be

BOMPA ON RECTANGULAR BASE

WALL

Glass not included, see p475 accessories.
Lamps not included, consult light source guide for our advice..



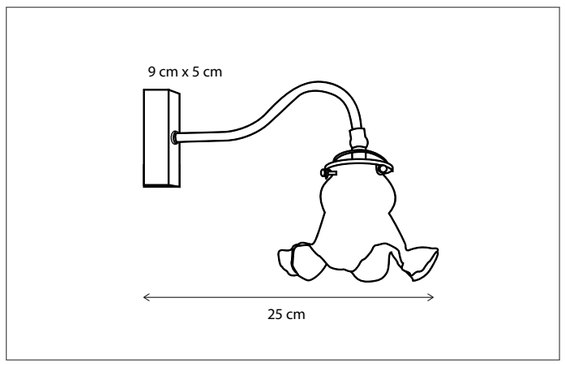

CODE	TYPE	FINISH	WATT	VOLT	FITTING
BOM001R00	Bompa on rectangular base	Bronze	6	230	BA15d
BOM101R00	Bompa on rectangular base	Brushed nickel	6	230	BA15d
BOM201R00	Bompa on rectangular base	Chrome	6	230	BA15d

Contact us for:
Customization & connectivity

BOMPA ON ROUND BASE

WALL

Glass not included, see p475 accessories.
Lamps not included, consult light source guide for our advice.

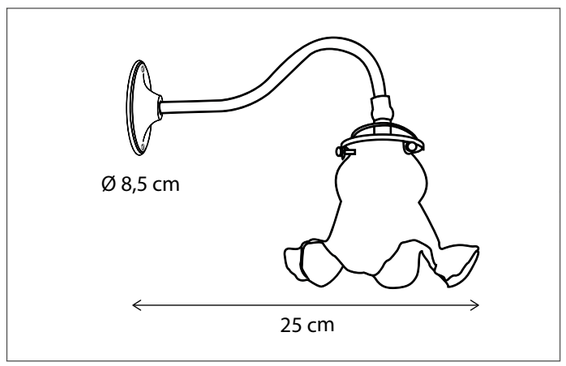



CODE	TYPE	FINISH	WATT	VOLT	FITTING
BOM001G00	Bompa on round base	Bronze	6	230	BA15d
BOM101G00	Bompa on round base	Brushed nickel	6	230	BA15d
BOM201G00	Bompa on round base	Chrome	6	230	BA15d

Contact us for:
Customization & connectivity

INDOOR I WALL I BOMPA

Authentage Catalogus 2024 Authentage Katalogus 2024 Authentage Catalogue 2024 Authentage Katalog 2024 Authentage Verlichting Authentage Lighting Authentage éclairage Authentage Beleuchtung
Authentage Webshop Authentage Verlichting Authentage Armaturen Authentage Winkels Authentage Verkooppunten Authentage Verdelers Authentage Verdeelpunten Authentage België Authentage Nederland Authentage Vente en Ligne Authentage Boutique Vente en Ligne Authentage Luminaires Authentage éclairage
Authentage Revendeurs Authentage Points de vente Authentage Magasins Authentage Boutiques Authentage Points de distribution Authentage France Authentage Lighting Authentage Retailers Authentage Dealers Authentage Distributors Authentage Points of sale Authentage Resellers Authentage England
Authentage Beleuchtung Authent Beleuchtung Authentage Leuchten Authentage Händler Authentage Shops Authentage Verkaufsstellen Authentage Vertriebspartner Authentage Deutschland Authentage E-shop Authentage Geschäfte Authentage Vertriebsstellen

www.Bcosy.be - Waarschoot - België - Belgique - Belgium - Belgien tel 0032 (0) 9 378 24 30 Mail: info@bcosy.be

BAINWAT GOOSENECK

WALL

IP 20 IP 43

Glass included.
Lamps not included, consult light source guide for our advice.



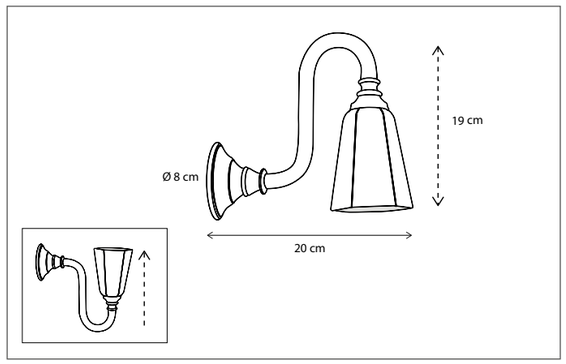

CODE	TYPE	FINISH	WATT	VOLT	FITTING
BNW001G70	Bainwat gooseneck IP20	Bronze	6	230	E14
BNW001G73	Bainwat gooseneck IP43	Bronze	6	230	E14
BNW101G70	Bainwat gooseneck IP20	Brushed nickel	6	230	E14
BNW101G73	Bainwat gooseneck IP43	Brushed nickel	6	230	E14
BNW201G70	Bainwat gooseneck IP20	Chrome	6	230	E14
BNW201G73	Bainwat gooseneck IP43	Chrome	6	230	E14

Contact us for:
Customization & connectivity

BAINWAT ARM

WALL

IP 20 IP 43

Glass included.
Lamps not included, consult light source guide for our advice.

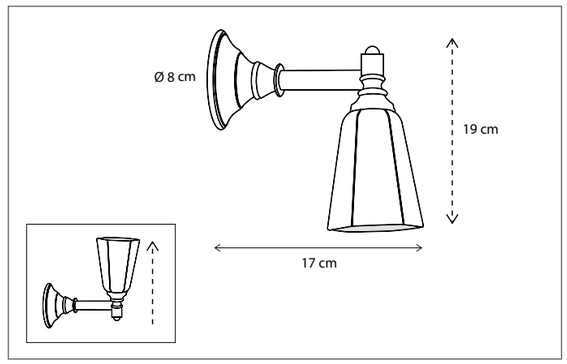



CODE	TYPE	FINISH	WATT	VOLT	FITTING
BNW001S70	Bainwat 90° arm IP20	Bronze	6	230	E14
BNW001S73	Bainwat 90° arm IP43	Bronze	6	230	E14
BNW002D70	Bainwat double 90° arm IP20	Bronze	2 x 6	230	E14
BNW002D73	Bainwat double 90° arm IP43	Bronze	2 x 6	230	E14
BNW101S70	Bainwat 90° arm IP20	Brushed nickel	6	230	E14
BNW101S73	Bainwat 90° arm IP43	Brushed nickel	6	230	E14
BNW102D70	Bainwat double 90° arm IP20	Brushed nickel	2 x 6	230	E14
BNW102D73	Bainwat double 90° arm IP43	Brushed nickel	2 x 6	230	E14
BNW201S70	Bainwat 90° arm IP20	Chrome	6	230	E14
BNW201S73	Bainwat 90° arm IP43	Chrome	6	230	E14
BNW202D70	Bainwat double 90° arm IP20	Chrome	2 x 6	230	E14
BNW202D73	Bainwat double 90° arm IP43	Chrome	2 x 6	230	E14

Contact us for:
Customization & connectivity

INDOOR I WALL I BAINTWAT

Authentage Catalogus 2024 Authentage Katalogus 2024 Authentage Catalogue 2024 Authentage Katalog 2024 Authentage Verlichting Authentage Lighting Authentage éclairage Authentage Beleuchtung
Authentage Webshop Authentage Verlichting Authentage Armaturen Authentage Winkels Authentage Verkooppunten Authentage Verdelers Authentage Verdeelpunten Authentage België Authentage Nederland Authentage Vente en Ligne Authentage Boutique Vente en Ligne Authentage Luminaires Authentage éclairage
Authentage Revendeurs Authentage Points de vente Authentage Magasins Authentage Boutiques Authentage Points de distribution Authentage France Authentage Lighting Authentage Retailers Authentage Dealers Authentage Distributors Authentage Points of sale Authentage Resellers Authentage England
Authentage Beleuchtung Authent Beleuchtung Authentage Leuchten Authentage Händler Authentage Shops Authentage Verkaufsstellen Authentage Vertriebspartner Authentage Deutschland Authentage E-shop Authentage Geschäfte Authentage Vertriebsstellen

www.Bcosy.be - Waarschoot - België - Belgique - Belgium - Belgien tel 0032 (0) 9 378 24 30 Mail: info@bcosy.be

ECLIPS

WALL



The light reflects on polished brass inside, resulting in a warm glow.
For control/connectivity options, see p494 accessories.
Lamps not included, consult light source guide for our advice.



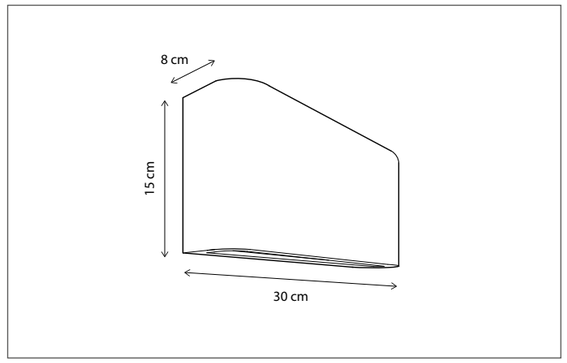

CODE	TYPE	FINISH	WATT	VOLT	FITTING
ECW0C1002	Eclips wall	Bronze	1 x 9	230	R7S

Contact us for:
Customization & connectivity

BEAUTIQUE PIPE

WALL



Built-in depth of minimal 12cm required for installation.
Lamps not included, consult light source guide for our advice.
Bellefeu® technology can be integrated.

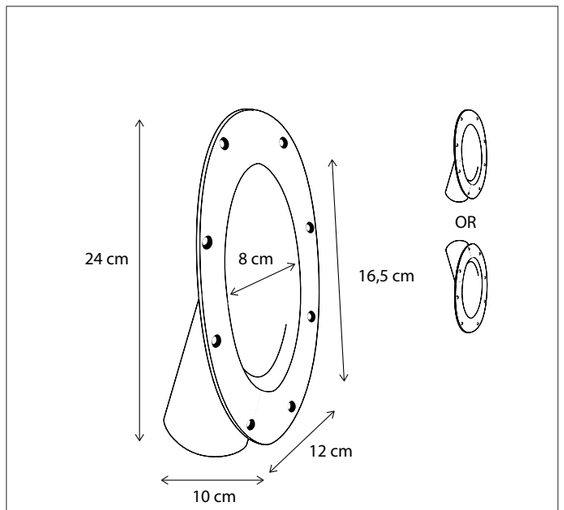



CODE	TYPE	FINISH	WATT	VOLT	FITTING
BEP001022	Beautique pipe	Bronze	8	230	GU10
BEP101022	Beautique pipe	Brushed nickel	8	230	GU10
BEP201022	Beautique pipe	Chrome	8	230	GU10

Contact us for:
Customization & connectivity

Authentage Catalogus 2024 Authentage Katalogus 2024 Authentage Catalogue 2024 Authentage Katalog 2024 Authentage Verlichting Authentage Lighting Authentage éclairage Authentage Beleuchtung
Authentage Webshop Authentage Verlichting Authentage Armaturen Authentage Winkels Authentage Verkooppunten Authentage Verdelers Authentage Verdeelpunten Authentage België Authentage Nederland Authentage Vente en Ligne Authentage Boutique Vente en Ligne Authentage Luminaires Authentage éclairage
Authentage Revendeurs Authentage Points de vente Authentage Magasins Authentage Boutiques Authentage Points de distribution Authentage France Authentage Lighting Authentage Retailers Authentage Dealers Authentage Distributors Authentage Points of sale Authentage Resellers Authentage England
Authentage Beleuchtung Authent Beleuchtung Authentage Leuchten Authentage Händler Authentage Shops Authentage Verkaufsstellen Authentage Vertriebspartner Authentage Deutschland Authentage E-shop Authentage Geschäfte Authentage Vertriebsstellen

www.Bcosy.be - Waarschoot - België - Belgique - Belgium - Belgien tel 0032 (0) 9 378 24 30 Mail: info@bcosy.be

PHANTOME

WALL



Lamps not included, consult light source guide for our advice.



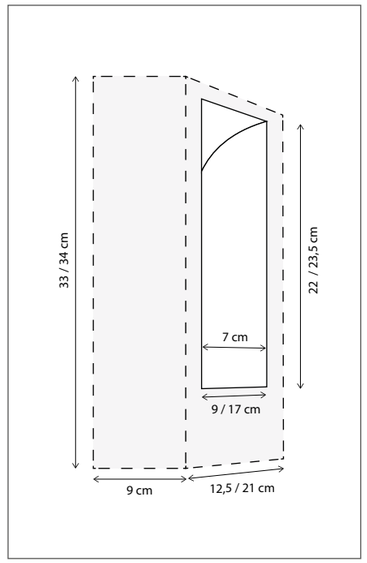

CODE	TYPE	FINISH	WATT	VOLT	FITTING
PHA501007	Phantôme wall small	-	8	230	GU10
PHA501005	Phantôme wall large	-	6	230	E14

Contact us for:
Customization & connectivity

LIT

WALL



Lamps not included, consult light source guide for our advice.
Push button integrated..

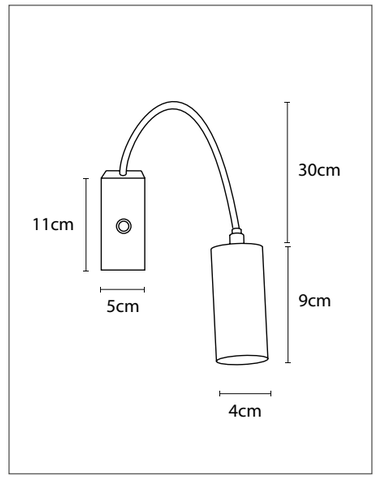



CODE	TYPE	FINISH	WATT	VOLT	FITTING
LIT001R11	Lisible lit wall	Bronze	5	230	G4

Contact us for:
Customization & connectivity

Authentage Catalogus 2024 Authentage Katalogus 2024 Authentage Catalogue 2024 Authentage Katalog 2024 Authentage Verlichting Authentage Lighting Authentage éclairage Authentage Beleuchtung
Authentage Webshop Authentage Verlichting Authentage Armaturen Authentage Winkels Authentage Verkooppunten Authentage Verdelers Authentage Verdeelpunten Authentage België Authentage Nederland Authentage Vente en Ligne Authentage Boutique Vente en Ligne Authentage Luminaires Authentage éclairage
Authentage Revendeurs Authentage Points de vente Authentage Magasins Authentage Boutiques Authentage Points de distribution Authentage France Authentage Lighting Authentage Retailers Authentage Dealers Authentage Distributors Authentage Points of sale Authentage Resellers Authentage England
Authentage Beleuchtung Authent Beleuchtung Authentage Leuchten Authentage Händler Authentage Shops Authentage Verkaufsstellen Authentage Vertriebspartner Authentage Deutschland Authentage E-shop Authentage Geschäfte Authentage Vertriebsstellen

www.Bcosy.be - Waarschoot - België - Belgique - Belgium - Belgien tel 0032 (0) 9 378 24 30 Mail: info@bcosy.be



LISIBLE POIRE

WALL

IP 20 | DALI | DI

Available in 2 versions: GU10 (no driver required) or BA15d (driver required & included).
Switch can be integrated, see p492 accessories.
Lamps not included, consult light source guide for our advice.

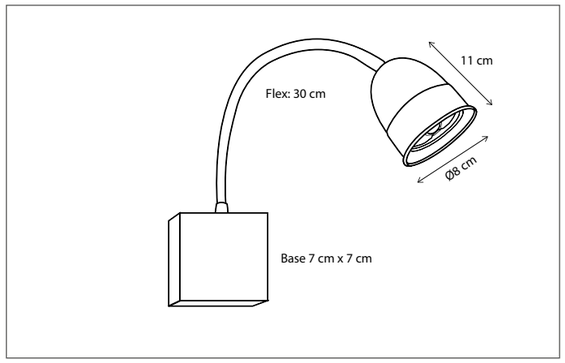



CODE	TYPE	FINISH	WATT	VOLT	FITTING
LPL001V70	Lisible poire wall	Bronze	8	230	GU10
LPL101V70	Lisible poire wall	Brushed nickel	8	230	GU10
LPL201V70	Lisible poire wall	Chrome	8	230	GU10
LPO001V70	Lisible poire wall	Bronze	8	230	BA15d
LPO101V70	Lisible poire wall	Brushed nickel	8	230	BA15d
LPO201V70	Lisible poire wall	Chrome	8	230	BA15d

Contact us for:
Customization & connectivity

Authentage Catalogus 2024 Authentage Katalogus 2024 Authentage Catalogue 2024 Authentage Katalog 2024 Authentage Verlichting Authentage Lighting Authentage éclairage Authentage Beleuchtung
Authentage Webshop Authentage Verlichting Authentage Armaturen Authentage Winkels Authentage Verkooppunten Authentage Verdelers Authentage Verdeelpunten Authentage België Authentage Nederland Authentage Vente en Ligne Authentage Boutique Vente en Ligne Authentage Luminaires Authentage éclairage
Authentage Revendeurs Authentage Points de vente Authentage Magasins Authentage Boutiques Authentage Points de distribution Authentage France Authentage Lighting Authentage Retailers Authentage Dealers Authentage Distributors Authentage Points of sale Authentage Resellers Authentage England
Authentage Beleuchtung Authent Beleuchtung Authentage Leuchten Authentage Händler Authentage Shops Authentage Verkaufsstellen Authentage Vertriebspartner Authentage Deutschland Authentage E-shop Authentage Geschäfte Authentage Vertriebsstellen

www.Bcosy.be - Waarschoot - België - Belgique - Belgium - Belgien tel 0032 (0) 9 378 24 30 Mail: info@bcosy.be

LISIBLE FLEURE

WALL

Switch can be integrated, see p492 accessories.
Lamps not included, consult light source guide for our advice.



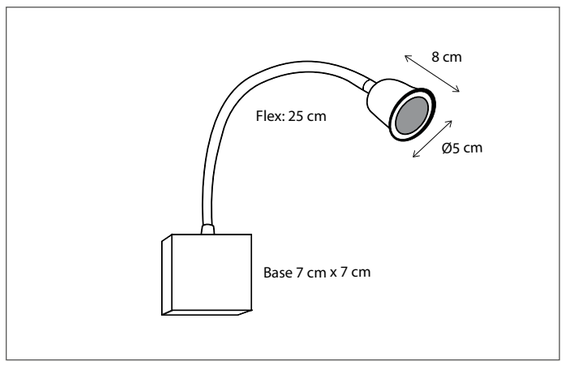

CODE	TYPE	FINISH	WATT	VOLT	FITTING
LFL0L1V70	Lisible fleure wall	Bronze	5	230	G4
LFL1L1V70	Lisible fleure wall	Brushed nickel	5	230	G4
LFL2L1V70	Lisible fleure wall	Chrome	5	230	G4

Contact us for:
Customization & connectivity

LISIBLE FLEURE TWIN

WALL

Switch can be integrated, see p492 accessories.
Lamps not included, consult light source guide for our advice.

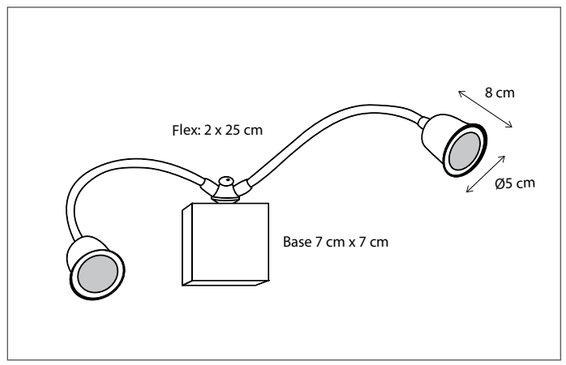



CODE	TYPE	FINISH	WATT	VOLT	FITTING
LFT0L2V70	Lisible fleure twin wall	Bronze	2 x 5	230	G4
LFT1L2V70	Lisible fleure twin wall	Brushed nickel	2 x 5	230	G4
LFT2L2V70	Lisible fleure twin wall	Chrome	2 x 5	230	G4

Contact us for:
Customization & connectivity

INDOOR I WALL I LISIBLE

Authentage Catalogus 2024 Authentage Katalogus 2024 Authentage Catalogue 2024 Authentage Katalog 2024 Authentage Verlichting Authentage Lighting Authentage éclairage Authentage Beleuchtung
Authentage Webshop Authentage Verlichting Authentage Armaturen Authentage Winkels Authentage Verkooppunten Authentage Verdelers Authentage Verdeelpunten Authentage België Authentage Nederland Authentage Vente en Ligne Authentage Boutique Vente en Ligne Authentage Luminaires Authentage éclairage
Authentage Revendeurs Authentage Points de vente Authentage Magasins Authentage Boutiques Authentage Points de distribution Authentage France Authentage Lighting Authentage Retailers Authentage Dealers Authentage Distributors Authentage Points of sale Authentage Resellers Authentage England
Authentage Beleuchtung Authent Beleuchtung Authentage Leuchten Authentage Händler Authentage Shops Authentage Verkaufsstellen Authentage Vertriebspartner Authentage Deutschland Authentage E-shop Authentage Geschäfte Authentage Vertriebsstellen

www.Bcosy.be - Waarschoot - België - Belgique - Belgium - Belgien tel 0032 (0) 9 378 24 30 Mail: info@bcosy.be

FISTON CAPUCHE ON ROUND BASE

WALL

Shades not included, see p479 accessories for different options.
Switch can be integrated, see p492 accessories.
Lamps not included, consult light source guide for our advice.



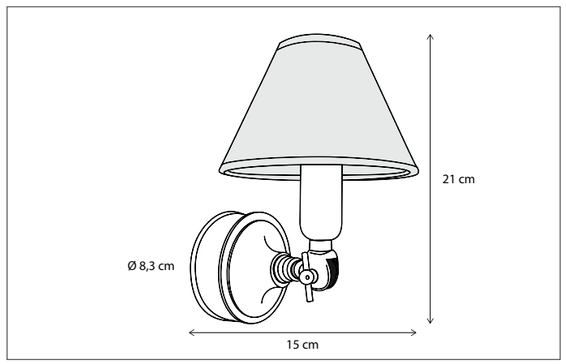

CODE	TYPE	FINISH	WATT	VOLT	FITTING
FIC001F83	Fiston capuche on round base	Bronze	6	230	E14
FIC101F83	Fiston capuche on round base	Brushed nickel	6	230	E14
FIC201F83	Fiston capuche on round base	Chrome	6	230	E14

Contact us for:
Customization & connectivity

FISTON CAPUCHE ON SQUARE BASE

WALL

Shades not included, see p479 accessories for different options.
Switch can be integrated, see p492 accessories.
Lamps not included, consult light source guide for our advice.

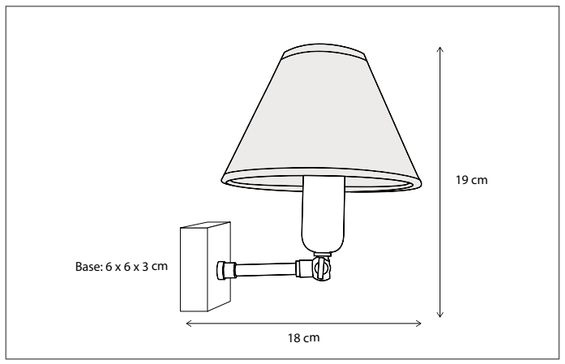



CODE	TYPE	FINISH	WATT	VOLT	FITTING
FIC001020	Fiston capuche on square base	Bronze	6	230	E14
FIC101020	Fiston capuche on square base	Brushed nickel	6	230	E14
FIC201020	Fiston capuche on square base	Chrome	6	230	E14

Contact us for:
Customization & connectivity

INDOOR I WALL I FISTON

Authentage Catalogus 2024 Authentage Katalogus 2024 Authentage Catalogue 2024 Authentage Katalog 2024 Authentage Verlichting Authentage Lighting Authentage éclairage Authentage Beleuchtung
Authentage Webshop Authentage Verlichting Authentage Armaturen Authentage Winkels Authentage Verkooppunten Authentage Verdelers Authentage Verdeelpunten Authentage België Authentage Nederland Authentage Vente en Ligne Authentage Boutique Vente en Ligne Authentage Luminaires Authentage éclairage
Authentage Revendeurs Authentage Points de vente Authentage Magasins Authentage Boutiques Authentage Points de distribution Authentage France Authentage Lighting Authentage Retailers Authentage Dealers Authentage Distributors Authentage Points of sale Authentage Resellers Authentage England
Authentage Beleuchtung Authent Beleuchtung Authentage Leuchten Authentage Händler Authentage Shops Authentage Verkaufsstellen Authentage Vertriebspartner Authentage Deutschland Authentage E-shop Authentage Geschäfte Authentage Vertriebsstellen

www.Bcosy.be - Waarschoot - België - Belgique - Belgium - Belgien tel 0032 (0) 9 378 24 30 Mail: info@bcosy.be

SEVERE ON LONG BASE

WALL

IP 20

Shades not included, see p478 accessories for different options.
Switch can be integrated, see p492 accessories.
Lamps not included, consult light source guide for our advice.



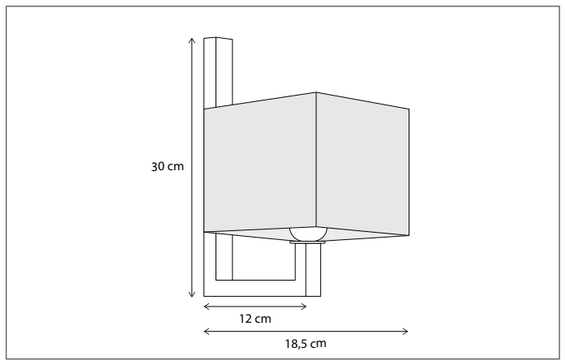

CODE	TYPE	FINISH	WATT	VOLT	FITTING
SEV001001	Sévère on long base	Bronze	15	230	E27
SEV101001	Sévère on long base	Brushed nickel	15	230	E27
SEV201001	Sévère on long base	Chrome	15	230	E27

Contact us for:
Customization & connectivity

SEVERE ON RECTANGULAR BASE

WALL

IP 20

Shades not included, see p478 accessories for different options.
Switch can be integrated, see p492 accessories.
Lamps not included, consult light source guide for our advice.

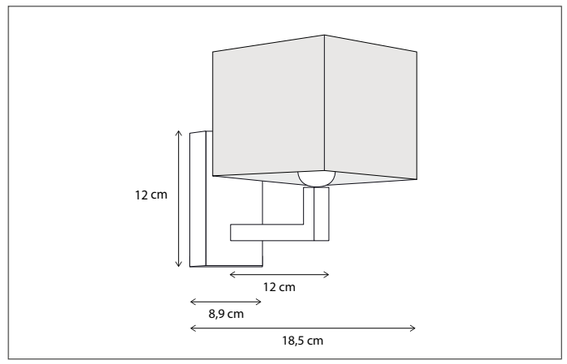



CODE	TYPE	FINISH	WATT	VOLT	FITTING
SEV001006	Sévère on rectangular base	Bronze	15	230	E27
SEV101006	Sévère on rectangular base	Brushed nickel	15	230	E27
SEV201006	Sévère on rectangular base	Chrome	15	230	E27

Contact us for:
Customization & connectivity

INDOOR I WALL I SEVERE

Authentage Catalogus 2024 Authentage Katalogus 2024 Authentage Catalogue 2024 Authentage Katalog 2024 Authentage Verlichting Authentage Lighting Authentage éclairage Authentage Beleuchtung
Authentage Webshop Authentage Verlichting Authentage Armaturen Authentage Winkels Authentage Verkooppunten Authentage Verdelers Authentage Verdeelpunten Authentage België Authentage Nederland Authentage Vente en Ligne Authentage Boutique Vente en Ligne Authentage Luminaires Authentage éclairage
Authentage Revendeurs Authentage Points de vente Authentage Magasins Authentage Boutiques Authentage Points de distribution Authentage France Authentage Lighting Authentage Retailers Authentage Dealers Authentage Distributors Authentage Points of sale Authentage Resellers Authentage England
Authentage Beleuchtung Authent Beleuchtung Authentage Leuchten Authentage Händler Authentage Shops Authentage Verkaufsstellen Authentage Vertriebspartner Authentage Deutschland Authentage E-shop Authentage Geschäfte Authentage Vertriebsstellen

www.Bcosy.be - Waarschoot - België - Belgique - Belgium - Belgien tel 0032 (0) 9 378 24 30 Mail: info@bcosy.be

SEVERE VERTICO

WALL

IP 20

Shades not included, see p478 accessories for different options.
Switch can be integrated, see p492 accessories.
Lamps not included, consult light source guide for our advice.



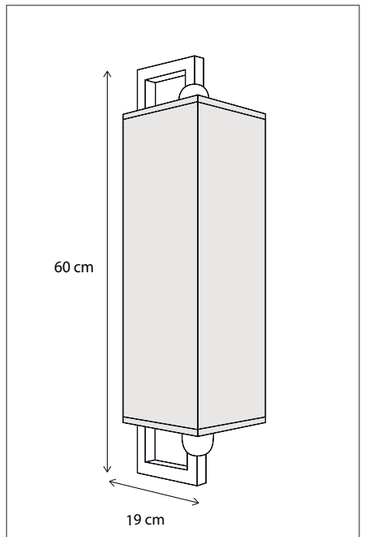

CODE	TYPE	FINISH	WATT	VOLT	FITTING
SEV002004	Sévère vertico	Bronze	2 x 15	230	E27
SEV102004	Sévère vertico	Brushed nickel	2 x 15	230	E27
SEV202004	Sévère vertico	Chrome	2 x 15	230	E27

Contact us for:
Customization & connectivity

SEVERE ON L PROFILE

WALL

IP 20

Shades not included, see p478 accessories for different options.
Switch can be integrated, see p492 accessories.
Lamps not included, consult light source guide for our advice.

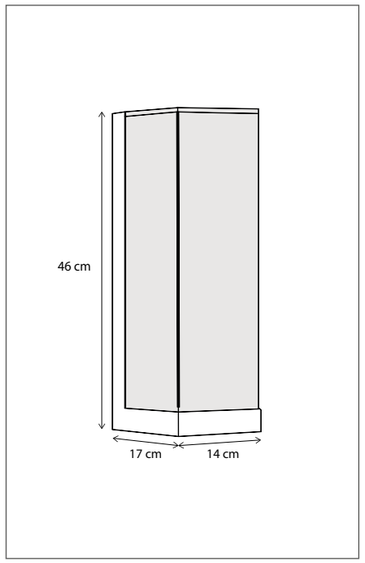



CODE	TYPE	FINISH	WATT	VOLT	FITTING
SEV001LL5	Sévère on L profile	Bronze	15	230	E27
SEV101LL5	Sévère on L profile	Brushed nickel	15	230	E27
SEV201LL5	Sévère on L profile	Chrome	15	230	E27

Contact us for:
Customization & connectivity

INDOOR I WALL I SEVERE

Authentage Catalogus 2024 Authentage Katalogus 2024 Authentage Catalogue 2024 Authentage Katalog 2024 Authentage Verlichting Authentage Lighting Authentage éclairage Authentage Beleuchtung
Authentage Webshop Authentage Verlichting Authentage Armaturen Authentage Winkels Authentage Verkooppunten Authentage Verdelers Authentage Verdeelpunten Authentage België Authentage Nederland Authentage Vente en Ligne Authentage Boutique Vente en Ligne Authentage Luminaires Authentage éclairage
Authentage Revendeurs Authentage Points de vente Authentage Magasins Authentage Boutiques Authentage Points de distribution Authentage France Authentage Lighting Authentage Retailers Authentage Dealers Authentage Distributors Authentage Points of sale Authentage Resellers Authentage England
Authentage Beleuchtung Authent Beleuchtung Authentage Leuchten Authentage Händler Authentage Shops Authentage Verkaufsstellen Authentage Vertriebspartner Authentage Deutschland Authentage E-shop Authentage Geschäfte Authentage Vertriebsstellen

www.Bcosy.be - Waarschoot - België - Belgique - Belgium - Belgien tel 0032 (0) 9 378 24 30 Mail: info@bcosy.be

GALED 90°

WALL



Select the correct driver, see p 487.

278



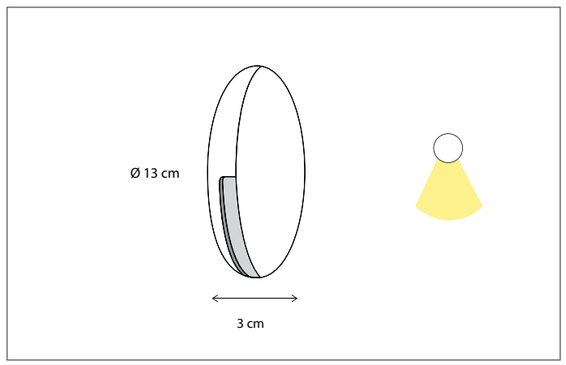

CODE	TYPE	FINISH	WATT	VOLT	FITTING
GAL001001	Galed 90°	Bronze	1,5	24	-
GAL101001	Galed 90°	Brushed nickel	1,5	24	-
GAL201001	Galed 90°	Chrome	1,5	24	-

Contact us for:
Customization & connectivity

GALED 2 X 90°

WALL



Select the correct driver, see p 487.

279

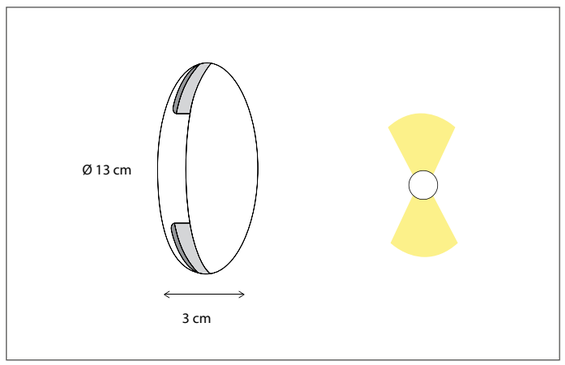



CODE	TYPE	FINISH	WATT	VOLT	FITTING
GAL002900	Galed 2 x 90°	Bronze	2 x 1,5	24	-
GAL102900	Galed 2 x 90°	Brushed nickel	2 x 1,5	24	-
GAL202900	Galed 2 x 90°	Chrome	2 x 1,5	24	-

Contact us for:
Customization & connectivity

INDOOR I WALL I GALED

Authentage Catalogus 2024 Authentage Katalogus 2024 Authentage Catalogue 2024 Authentage Katalog 2024 Authentage Verlichting Authentage Lighting Authentage éclairage Authentage Beleuchtung
Authentage Webshop Authentage Verlichting Authentage Armaturen Authentage Winkels Authentage Verkooppunten Authentage Verdelers Authentage Verdeelpunten Authentage België Authentage Nederland Authentage Vente en Ligne Authentage Boutique Vente en Ligne Authentage Luminaires Authentage éclairage
Authentage Revendeurs Authentage Points de vente Authentage Magasins Authentage Boutiques Authentage Points de distribution Authentage France Authentage Lighting Authentage Retailers Authentage Dealers Authentage Distributors Authentage Points of sale Authentage Resellers Authentage England
Authentage Beleuchtung Authent Beleuchtung Authentage Leuchten Authentage Händler Authentage Shops Authentage Verkaufsstellen Authentage Vertriebspartner Authentage Deutschland Authentage E-shop Authentage Geschäfte Authentage Vertriebsstellen

www.Bcosy.be - Waarschoot - België - Belgique - Belgium - Belgien tel 0032 (0) 9 378 24 30 Mail: info@bcosy.be

GALED 360°

WALL

GRILLE CARRE

WALL

Select the correct driver, see p 487.

Integrated LED (2700K).

280



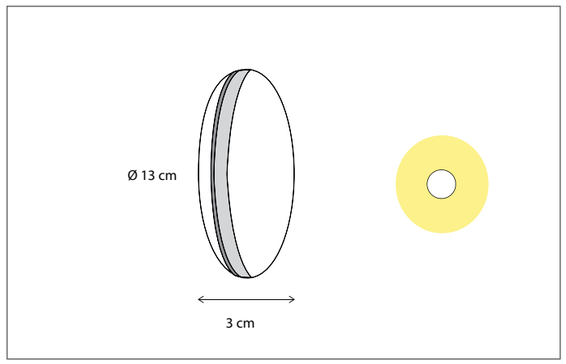

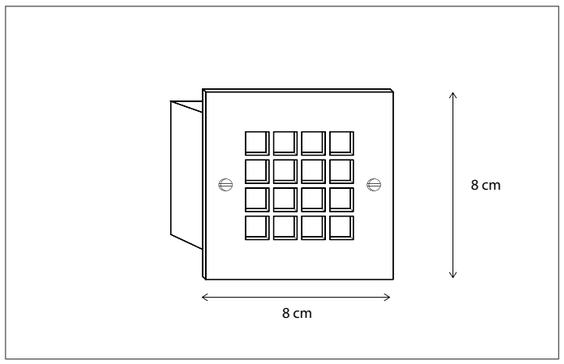



281

CODE	TYPE	FINISH	WATT	VOLT	FITTING
GAL003600	Galed 360°	Bronze	4,5	24	-
GAL103600	Galed 360°	Brushed nickel	4,5	24	-
GAL203600	Galed 360°	Chrome	4,5	24	-

Contact us for:

Customization & connectivity

CODE	TYPE	FINISH	WATT	VOLT	FITTING
GRI001081	Grille carré 8 cm	Bronze	3	230	-
GRI101081	Grille carré 8 cm	Brushed nickel	3	230	-
GRI201081	Grille carré 8 cm	Chrome	3	230	-
GRI301081	Grille carré 8 cm	Polished brass	4	230	-

Contact us for:

Customization & connectivity

Authentage Catalogus 2024 Authentage Katalogus 2024 Authentage Catalogue 2024 Authentage Katalog 2024 Authentage Verlichting Authentage Lighting Authentage éclairage Authentage Beleuchtung
Authentage Webshop Authentage Verlichting Authentage Armaturen Authentage Winkels Authentage Verkooppunten Authentage Verdelers Authentage Verdeelpunten Authentage België Authentage Nederland Authentage Vente en Ligne Authentage Boutique Vente en Ligne Authentage Luminaires Authentage éclairage
Authentage Revendeurs Authentage Points de vente Authentage Magasins Authentage Boutiques Authentage Points de distribution Authentage France Authentage Lighting Authentage Retailers Authentage Dealers Authentage Distributors Authentage Points of sale Authentage Resellers Authentage England
Authentage Beleuchtung Authent Beleuchtung Authentage Leuchten Authentage Händler Authentage Shops Authentage Verkaufsstellen Authentage Vertriebspartner Authentage Deutschland Authentage E-shop Authentage Geschäfte Authentage Vertriebsstellen

www.Bcosy.be - Waarschoot - België - Belgique - Belgium - Belgien tel 0032 (0) 9 378 24 30 Mail: info@bcosy.be

GRILLE CARRE DECO

WALL

IP 54

Integrated LED (2700K).

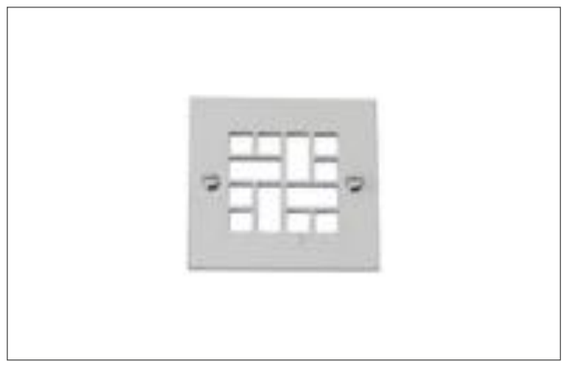

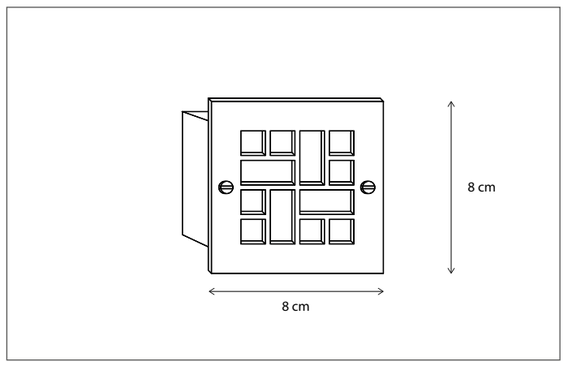

CODE	TYPE	FINISH	WATT	VOLT	FITTING
GRI001003	Grille carré déco 8 cm	Bronze	3	230	-
GRI101003	Grille carré déco 8 cm	Brushed nickel	3	230	-
GRI201003	Grille carré déco 8 cm	Chrome	3	230	-
GRI301003	Grille carré déco 8 cm	Polished brass	3	230	-

Contact us for:

Customization & connectivity

GRILLE LOUNGE

WALL

IP 54

Integrated LED (2700K).

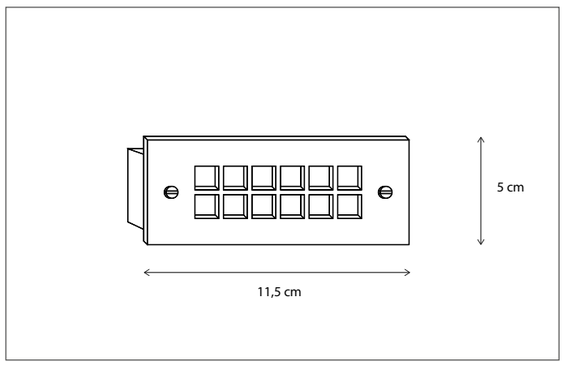



CODE	TYPE	FINISH	WATT	VOLT	FITTING
GRI001002	Grille lounge 11,5 x 5 cm	Bronze	3	230	-
GRI101002	Grille lounge 11,5 x 5 cm	Brushed nickel	3	230	-
GRI201002	Grille lounge 11,5 x 5 cm	Chrome	3	230	-
GRI301002	Grille lounge 11,5 x 5 cm	Polished brass	3	230	-

Contact us for:

Customization & connectivity

INDOOR I WALL I GRILLE

Authentage Catalogus 2024 Authentage Katalogus 2024 Authentage Catalogue 2024 Authentage Katalog 2024 Authentage Verlichting Authentage Lighting Authentage éclairage Authentage Beleuchtung
Authentage Webshop Authentage Verlichting Authentage Armaturen Authentage Winkels Authentage Verkooppunten Authentage Verdelers Authentage Verdeelpunten Authentage België Authentage Nederland Authentage Vente en Ligne Authentage Boutique Vente en Ligne Authentage Luminaires Authentage éclairage
Authentage Revendeurs Authentage Points de vente Authentage Magasins Authentage Boutiques Authentage Points de distribution Authentage France Authentage Lighting Authentage Retailers Authentage Dealers Authentage Distributors Authentage Points of sale Authentage Resellers Authentage England
Authentage Beleuchtung Authent Beleuchtung Authentage Leuchten Authentage Händler Authentage Shops Authentage Verkaufsstellen Authentage Vertriebspartner Authentage Deutschland Authentage E-shop Authentage Geschäfte Authentage Vertriebsstellen

www.Bcosy.be - Waarschoot - België - Belgique - Belgium - Belgien tel 0032 (0) 9 378 24 30 Mail: info@bcosy.be

MATISSE 286

RUBENS 296

Picture Light

INDOOR

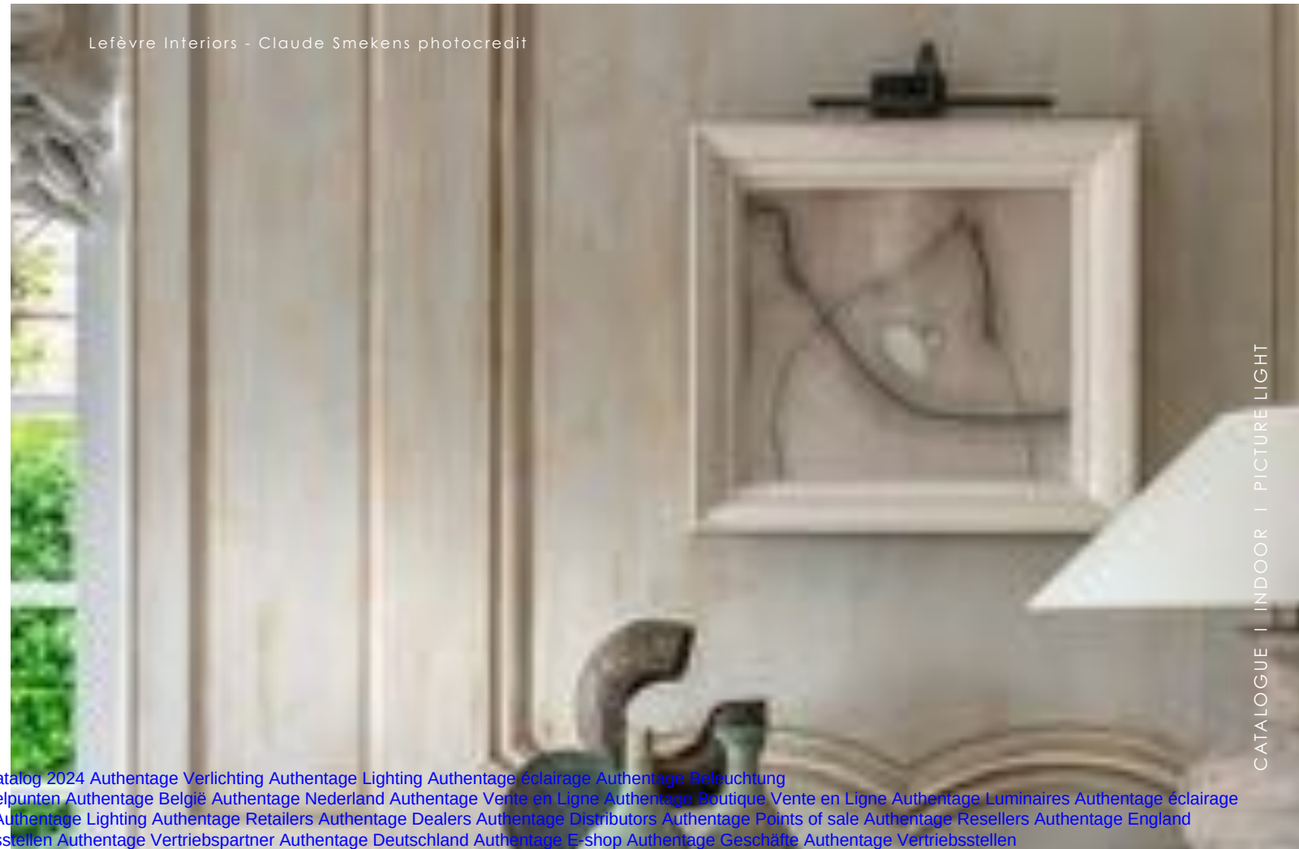

CATALOGUE I INDOOR I PICTURE LIGHT

Authentage Catalogus 2024 Authentage Katalogus 2024 Authentage Catalogue 2024 Authentage Katalog 2024 Authentage Verlichting Authentage Lighting Authentage éclairage Authentage Beleuchtung
Authentage Webshop Authentage Verlichting Authentage Armaturen Authentage Winkels Authentage Verkooppunten Authentage Verdelers Authentage Verdeelpunten Authentage België Authentage Nederland Authentage Vente en Ligne Authentage Boutique Vente en Ligne Authentage Luminaires Authentage éclairage
Authentage Revendeurs Authentage Points de vente Authentage Magasins Authentage Boutiques Authentage Points de distribution Authentage France Authentage Lighting Authentage Retailers Authentage Dealers Authentage Distributors Authentage Points of sale Authentage Resellers Authentage England
Authentage Beleuchtung Authent Beleuchtung Authentage Leuchten Authentage Händler Authentage Shops Authentage Verkaufsstellen Authentage Vertriebspartner Authentage Deutschland Authentage E-shop Authentage Geschäfte Authentage Vertriebsstellen

www.Bcosy.be - Waarschoot - België - Belgique - Belgium - Belgien tel 0032 (0) 9 378 24 30 Mail: info@bcosy.be

MATISSE INVISIBLE BASE

PICTURE LIGHT

Base hidden behind your artwork.
Available in 2200K and 2700K.
Switch between 2200K and 2500K can be integrated on request.
Customise your product with the connection system, see p482 accessories.



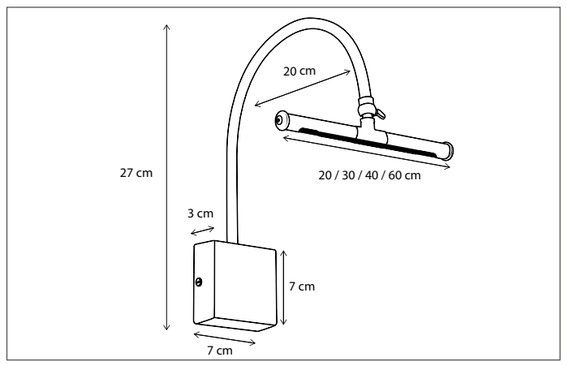

CODE	TYPE	FINISH	WATT	VOLT	FITTING
MAT022I20	Matisse invisible base 2200K - 20 cm	Bronze	1,4	230	-
MAT022I30	Matisse invisible base 2200K - 30 cm	Bronze	2,8	230	-
MAT022I40	Matisse invisible base 2200K - 40 cm	Bronze	4,2	230	-
MAT022I60	Matisse invisible base 2200K - 60 cm	Bronze	7	230	-
MAT027I20	Matisse invisible base 2700K - 20 cm	Bronze	1,4	230	-
MAT027I30	Matisse invisible base 2700K - 30 cm	Bronze	2,8	230	-
MAT027I40	Matisse invisible base 2700K - 40 cm	Bronze	4,2	230	-
MAT027I60	Matisse invisible base 2700K - 60 cm	Bronze	7	230	-
MAT122I20	Matisse invisible base 2200K - 20 cm	Brushed nickel	1,4	230	-
MAT122I30	Matisse invisible base 2200K - 30 cm	Brushed nickel	2,8	230	-
MAT122I40	Matisse invisible base 2200K - 40 cm	Brushed nickel	4,2	230	-
MAT122I60	Matisse invisible base 2200K - 60 cm	Brushed nickel	7	230	-
MAT127I20	Matisse invisible base 2700K - 20 cm	Brushed nickel	1,4	230	-
MAT127I30	Matisse invisible base 2700K - 30 cm	Brushed nickel	2,8	230	-
MAT127I40	Matisse invisible base 2700K - 40 cm	Brushed nickel	4,2	230	-
MAT127I60	Matisse invisible base 2700K - 60 cm	Brushed nickel	7	230	-
MAT222I20	Matisse invisible base 2200K - 20 cm	Chrome	1,4	230	-
MAT222I30	Matisse invisible base 2200K - 30 cm	Chrome	2,8	230	-
MAT222I40	Matisse invisible base 2200K - 40 cm	Chrome	4,2	230	-
MAT222I60	Matisse invisible base 2200K - 60 cm	Chrome	7	230	-
MAT227I20	Matisse invisible base 2700K - 20 cm	Chrome	1,4	230	-
MAT227I30	Matisse invisible base 2700K - 30 cm	Chrome	2,8	230	-
MAT227I40	Matisse invisible base 2700K - 40 cm	Chrome	4,2	230	-
MAT227I60	Matisse invisible base 2700K - 60 cm	Chrome	7	230	-
MAT322I20	Matisse invisible base 2200K - 20 cm	Polished brass	1,4	230	-
MAT322I30	Matisse invisible base 2200K - 30 cm	Polished brass	2,8	230	-
MAT322I40	Matisse invisible base 2200K - 40 cm	Polished brass	4,2	230	-
MAT322I60	Matisse invisible base 2200K - 60 cm	Polished brass	7	230	-
MAT327I20	Matisse invisible base 2700K - 20 cm	Polished brass	1,4	230	-
MAT327I30	Matisse invisible base 2700K - 30 cm	Polished brass	2,8	230	-
MAT327I40	Matisse invisible base 2700K - 40 cm	Polished brass	4,2	230	-
MAT327I60	Matisse invisible base 2700K - 60 cm	Polished brass	7	230	-

Contact us for:
Customization & connectivity

Contact us for:
Customization & connectivity

Authentage Catalogus 2024 Authentage Katalogus 2024 Authentage Catalogue 2024 Authentage Katalog 2024 Authentage Verlichting Authentage Lighting Authentage éclairage Authentage Beleuchtung
Authentage Webshop Authentage Verlichting Authentage Armaturen Authentage Winkels Authentage Verkooppunten Authentage Verdelers Authentage Verdeelpunten Authentage België Authentage Nederland Authentage Vente en Ligne Authentage Boutique Vente en Ligne Authentage Luminaires Authentage éclairage
Authentage Revendeurs Authentage Points de vente Authentage Magasins Authentage Boutiques Authentage Points de distribution Authentage France Authentage Lighting Authentage Retailers Authentage Dealers Authentage Distributors Authentage Points of sale Authentage Resellers Authentage England
Authentage Beleuchtung Authent Beleuchtung Authentage Leuchten Authentage Händler Authentage Shops Authentage Verkaufsstellen Authentage Vertriebspartner Authentage Deutschland Authentage E-shop Authentage Geschäfte Authentage Vertriebsstellen

www.Bcosy.be - Waarschoot - België - Belgique - Belgium - Belgien tel 0032 (0) 9 378 24 30 Mail: info@bcosy.be

MATISSE
RECTANGULAR BASE

PICTURE LIGHT

IP 20 DI

Available in 2200K and 2700K.
Switch between 2200K and 2500K can be integrated on request.
Customise your product with the connection system, see p482 accessories.



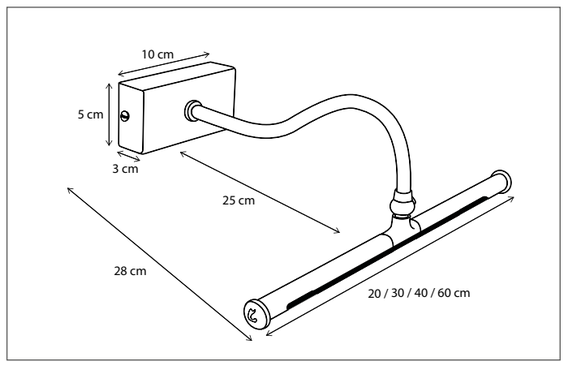

CODE	TYPE	FINISH	WATT	VOLT	FITTING
MAT022R20	Matisse rectangular base 2200K - 20 cm	Bronze	1,4	230	-
MAT022R30	Matisse rectangular base 2200K - 30 cm	Bronze	2,8	230	-
MAT022R40	Matisse rectangular base 2200K - 40 cm	Bronze	4,2	230	-
MAT022R60	Matisse rectangular base 2200K - 60 cm	Bronze	7	230	-
MAT027R20	Matisse rectangular base 2700K - 20 cm	Bronze	1,4	230	-
MAT027R30	Matisse rectangular base 2700K - 30 cm	Bronze	2,8	230	-
MAT027R40	Matisse rectangular base 2700K - 40 cm	Bronze	4,2	230	-
MAT027R60	Matisse rectangular base 2700K - 60 cm	Bronze	7	230	-
MAT122R20	Matisse rectangular base 2200K - 20 cm	Brushed nickel	1,4	230	-
MAT122R30	Matisse rectangular base 2200K - 30 cm	Brushed nickel	2,8	230	-
MAT122R40	Matisse rectangular base 2200K - 40 cm	Brushed nickel	4,2	230	-
MAT122R60	Matisse rectangular base 2200K - 60 cm	Brushed nickel	7	230	-
MAT127R20	Matisse rectangular base 2700K - 20 cm	Brushed nickel	1,4	230	-
MAT127R30	Matisse rectangular base 2700K - 30 cm	Brushed nickel	2,8	230	-

Contact us for:
Customization & connectivity

MATISSE
RECTANGULAR BASE

PICTURE LIGHT

CODE	TYPE	FINISH	WATT	VOLT	FITTING
MAT127R40	Matisse rectangular base 2700K - 40 cm	Brushed nickel	4,2	230	-
MAT127R60	Matisse rectangular base 2700K - 60 cm	Brushed nickel	7	230	-
MAT222R20	Matisse rectangular base 2200K - 20 cm	Chrome	1,4	230	-
MAT222R30	Matisse rectangular base 2200K - 30 cm	Chrome	2,8	230	-
MAT222R40	Matisse rectangular base 2200K - 40 cm	Chrome	4,2	230	-
MAT222R60	Matisse rectangular base 2200K - 60 cm	Chrome	7	230	-
MAT227R20	Matisse rectangular base 2700K - 20 cm	Chrome	1,4	230	-
MAT227R30	Matisse rectangular base 2700K - 30 cm	Chrome	2,8	230	-
MAT227R40	Matisse rectangular base 2700K - 40 cm	Chrome	4,2	230	-
MAT227R60	Matisse rectangular base 2700K - 60 cm	Chrome	7	230	-
MAT322R20	Matisse rectangular base 2200K - 20 cm	Polished brass	1,4	230	-
MAT322R30	Matisse rectangular base 2200K - 30 cm	Polished brass	2,8	230	-
MAT322R40	Matisse rectangular base 2200K - 40 cm	Polished brass	4,2	230	-
MAT322R60	Matisse rectangular base 2200K - 60 cm	Polished brass	7	230	-
MAT327R20	Matisse rectangular base 2700K - 20 cm	Polished brass	1,4	230	-
MAT327R30	Matisse rectangular base 2700K - 30 cm	Polished brass	2,8	230	-
MAT327R40	Matisse rectangular base 2700K - 40 cm	Polished brass	4,2	230	-
MAT327R60	Matisse rectangular base 2700K - 60 cm	Polished brass	7	230	-

Contact us for:
Customization & connectivity

INDOOR I PICTURE LIGHT I MATISSE

Authentage Catalogus 2024 Authentage Katalogus 2024 Authentage Catalogue 2024 Authentage Katalog 2024 Authentage Verlichting Authentage Lighting Authentage éclairage Authentage Beleuchtung
Authentage Webshop Authentage Verlichting Authentage Armaturen Authentage Winkels Authentage Verkooppunten Authentage Verdelers Authentage Verdeelpunten Authentage België Authentage Nederland Authentage Vente en Ligne Authentage Boutique Vente en Ligne Authentage Luminaires Authentage éclairage
Authentage Revendeurs Authentage Points de vente Authentage Magasins Authentage Boutiques Authentage Points de distribution Authentage France Authentage Lighting Authentage Retailers Authentage Dealers Authentage Distributors Authentage Points of sale Authentage Resellers Authentage England
Authentage Beleuchtung Authent Beleuchtung Authentage Leuchten Authentage Händler Authentage Shops Authentage Verkaufsstellen Authentage Vertriebspartner Authentage Deutschland Authentage E-shop Authentage Geschäfte Authentage Vertriebsstellen

www.Bcosy.be - Waarschoot - België - Belgique - Belgium - Belgien tel 0032 (0) 9 378 24 30 Mail: info@bcosy.be

MATISSE 90°
RECTANGULAR BASE

PICTURE LIGHT

IP 20 DI

Available in 2200K and 2700K.
Switch between 2200K and 2500K can be integrated on request.
Customise your product with the connection system, see p482 accessories.



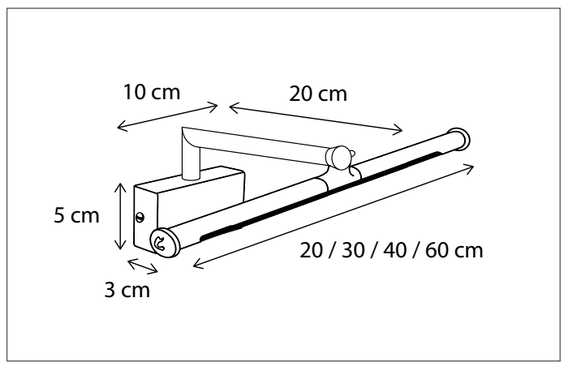

CODE	TYPE	FINISH	WATT	VOLT	FITTING
MAT022L20	Matisse 90° rectangular base 2200K - 20 cm	Bronze	1,4	230	-
MAT022L30	Matisse 90° rectangular base 2200K - 30 cm	Bronze	2,8	230	-
MAT022L40	Matisse 90° rectangular base 2200K - 40 cm	Bronze	4,2	230	-
MAT022L60	Matisse 90° rectangular base 2200K - 60 cm	Bronze	7	230	-
MAT027L20	Matisse 90° rectangular base 2700K - 20 cm	Bronze	1,4	230	-
MAT027L30	Matisse 90° rectangular base 2700K - 30 cm	Bronze	2,8	230	-
MAT027L40	Matisse 90° rectangular base 2700K - 40 cm	Bronze	4,2	230	-
MAT027L60	Matisse 90° rectangular base 2700K - 60 cm	Bronze	7	230	-
MAT122L20	Matisse 90° rectangular base 2200K - 20 cm	Brushed nickel	1,4	230	-
MAT122L30	Matisse 90° rectangular base 2200K - 30 cm	Brushed nickel	2,8	230	-
MAT122L40	Matisse 90° rectangular base 2200K - 40 cm	Brushed nickel	4,2	230	-
MAT122L60	Matisse 90° rectangular base 2200K - 60 cm	Brushed nickel	7	230	-
MAT127L20	Matisse 90° rectangular base 2700K - 20 cm	Brushed nickel	1,4	230	-
MAT127L30	Matisse 90° rectangular base 2700K - 30 cm	Brushed nickel	2,8	230	-

Contact us for:
Customization & connectivity

MATISSE 90°
RECTANGULAR BASE

PICTURE LIGHT

CODE	TYPE	FINISH	WATT	VOLT	FITTING
MAT127L40	Matisse 90° rectangular base 2700K - 40 cm	Brushed nickel	4,2	230	-
MAT127L60	Matisse 90° rectangular base 2700K - 60 cm	Brushed nickel	7	230	-
MAT222L20	Matisse 90° rectangular base 2200K - 20 cm	Chrome	1,4	230	-
MAT222L30	Matisse 90° rectangular base 2200K - 30 cm	Chrome	2,8	230	-
MAT222L40	Matisse 90° rectangular base 2200K - 40 cm	Chrome	4,2	230	-
MAT222L60	Matisse 90° rectangular base 2200K - 60 cm	Chrome	7	230	-
MAT227L20	Matisse 90° rectangular base 2700K - 20 cm	Chrome	1,4	230	-
MAT227L30	Matisse 90° rectangular base 2700K - 30 cm	Chrome	2,8	230	-
MAT227L40	Matisse 90° rectangular base 2700K - 40 cm	Chrome	4,2	230	-
MAT227L60	Matisse 90° rectangular base 2700K - 60 cm	Chrome	7	230	-
MAT322L20	Matisse 90° rectangular base 2200K - 20 cm	Polished brass	1,4	230	-
MAT322L30	Matisse 90° rectangular base 2200K - 30 cm	Polished brass	2,8	230	-
MAT322L40	Matisse 90° rectangular base 2200K - 40 cm	Polished brass	4,2	230	-
MAT322L60	Matisse 90° rectangular base 2200K - 60 cm	Polished brass	7	230	-
MAT327L20	Matisse 90° rectangular base 2700K - 20 cm	Polished brass	1,4	230	-
MAT327L30	Matisse 90° rectangular base 2700K - 30 cm	Polished brass	2,8	230	-
MAT327L40	Matisse 90° rectangular base 2700K - 40 cm	Polished brass	4,2	230	-
MAT327L60	Matisse 90° rectangular base 2700K - 60 cm	Polished brass	7	230	-

Contact us for:
Customization & connectivity

INDOOR I PICTURE LIGHT I MATISSE

Authentage Catalogus 2024 Authentage Katalogus 2024 Authentage Catalogue 2024 Authentage Katalog 2024 Authentage Verlichting Authentage Lighting Authentage éclairage Authentage Beleuchtung
Authentage Webshop Authentage Verlichting Authentage Armaturen Authentage Winkels Authentage Verkooppunten Authentage Verdelers Authentage Verdeelpunten Authentage België Authentage Nederland Authentage Vente en Ligne Authentage Boutique Vente en Ligne Authentage Luminaires Authentage éclairage
Authentage Revendeurs Authentage Points de vente Authentage Magasins Authentage Boutiques Authentage Points de distribution Authentage France Authentage Lighting Authentage Retailers Authentage Dealers Authentage Distributors Authentage Points of sale Authentage Resellers Authentage England
Authentage Beleuchtung Authent Beleuchtung Authentage Leuchten Authentage Händler Authentage Shops Authentage Verkaufsstellen Authentage Vertriebspartner Authentage Deutschland Authentage E-shop Authentage Geschäfte Authentage Vertriebsstellen

www.Bcosy.be - Waarschoot - België - Belgique - Belgium - Belgien tel 0032 (0) 9 378 24 30 Mail: info@bcosy.be

MATISSE
CABINET MOUNTED

PICTURE LIGHT

Select the correct driver, see p 487.
Available in 2200K and 2700K.



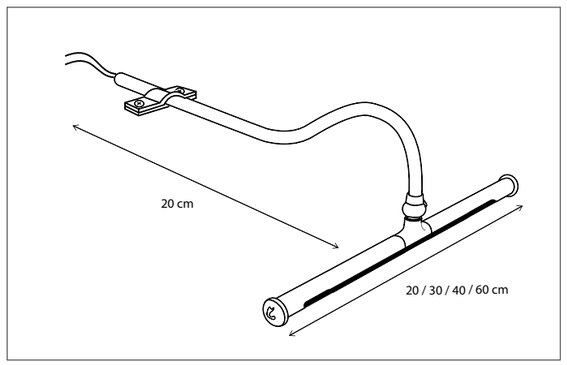

CODE	TYPE	FINISH	WATT	VOLT	FITTING
MAT022C20	Matisse cabinet mounted 2200K - 20 cm	Bronze	1,4	24	-
MAT022C30	Matisse cabinet mounted 2200K - 30 cm	Bronze	2,8	24	-
MAT022C40	Matisse cabinet mounted 2200K - 40 cm	Bronze	4,2	24	-
MAT022C60	Matisse cabinet mounted 2200K - 60 cm	Bronze	7	24	-
MAT027C20	Matisse cabinet mounted 2700K - 20 cm	Bronze	1,4	24	-
MAT027C30	Matisse cabinet mounted 2700K - 30 cm	Bronze	2,8	24	-
MAT027C40	Matisse cabinet mounted 2700K - 40 cm	Bronze	4,2	24	-
MAT027C60	Matisse cabinet mounted 2700K - 60 cm	Bronze	7	24	-
MAT122C20	Matisse cabinet mounted 2200K - 20 cm	Brushed nickel	1,4	24	-
MAT122C30	Matisse cabinet mounted 2200K - 30 cm	Brushed nickel	2,8	24	-
MAT122C40	Matisse cabinet mounted 2200K - 40 cm	Brushed nickel	4,2	24	-
MAT122C60	Matisse cabinet mounted 2200K - 60 cm	Brushed nickel	7	24	-
MAT127C20	Matisse cabinet mounted 2700K - 20 cm	Brushed nickel	1,4	24	-
MAT127C30	Matisse cabinet mounted 2700K - 30 cm	Brushed nickel	2,8	24	-

Contact us for:
Customization & connectivity

CODE	TYPE	FINISH	WATT	VOLT	FITTING
MAT127C40	Matisse cabinet mounted 2700K - 40 cm	Brushed nickel	4,2	24	-
MAT127C60	Matisse cabinet mounted 2700K - 60 cm	Brushed nickel	7	24	-
MAT222C20	Matisse cabinet mounted 2200K - 20 cm	Chrome	1,4	24	-
MAT222C30	Matisse cabinet mounted 2200K - 30 cm	Chrome	2,8	24	-
MAT222C40	Matisse cabinet mounted 2200K - 40 cm	Chrome	4,2	24	-
MAT222C60	Matisse cabinet mounted 2200K - 60 cm	Chrome	7	24	-
MAT227C20	Matisse cabinet mounted 2700K - 20 cm	Chrome	1,4	24	-
MAT227C30	Matisse cabinet mounted 2700K - 30 cm	Chrome	2,8	24	-
MAT227C40	Matisse cabinet mounted 2700K - 40 cm	Chrome	4,2	24	-
MAT227C60	Matisse cabinet mounted 2700K - 60 cm	Chrome	7	24	-
MAT322C20	Matisse cabinet mounted 2200K - 20 cm	Polished brass	1,4	24	-
MAT322C30	Matisse cabinet mounted 2200K - 30 cm	Polished brass	2,8	24	-
MAT322C40	Matisse cabinet mounted 2200K - 40 cm	Polished brass	4,2	24	-
MAT322C60	Matisse cabinet mounted 2200K - 60 cm	Polished brass	7	24	-
MAT327C20	Matisse cabinet mounted 2700K - 20 cm	Polished brass	1,4	24	-
MAT327C30	Matisse cabinet mounted 2700K - 30 cm	Polished brass	2,8	24	-
MAT327C40	Matisse cabinet mounted 2700K - 40 cm	Polished brass	4,2	24	-
MAT327C60	Matisse cabinet mounted 2700K - 60 cm	Polished brass	7	24	-

Contact us for:
Customization & connectivity

INDOOR I PICTURE LIGHT I MATISSE

Authentage Catalogus 2024 Authentage Katalogus 2024 Authentage Catalogue 2024 Authentage Katalog 2024 Authentage Verlichting Authentage Lighting Authentage éclairage Authentage Beleuchtung
Authentage Webshop Authentage Verlichting Authentage Armaturen Authentage Winkels Authentage Verkooppunten Authentage Verdelers Authentage Verdeelpunten Authentage België Authentage Nederland Authentage Vente en Ligne Authentage Boutique Vente en Ligne Authentage Luminaires Authentage éclairage
Authentage Revendeurs Authentage Points de vente Authentage Magasins Authentage Boutiques Authentage Points de distribution Authentage France Authentage Lighting Authentage Retailers Authentage Dealers Authentage Distributors Authentage Points of sale Authentage Resellers Authentage England
Authentage Beleuchtung Authent Beleuchtung Authentage Leuchten Authentage Händler Authentage Shops Authentage Verkaufsstellen Authentage Vertriebspartner Authentage Deutschland Authentage E-shop Authentage Geschäfte Authentage Vertriebsstellen

www.Bcosy.be - Waarschoot - België - Belgique - Belgium - Belgien tel 0032 (0) 9 378 24 30 Mail: info@bcosy.be

RUBENS

PICTURE LIGHT

IP 20

Lamps not included, consult light source guide for our advice.

296



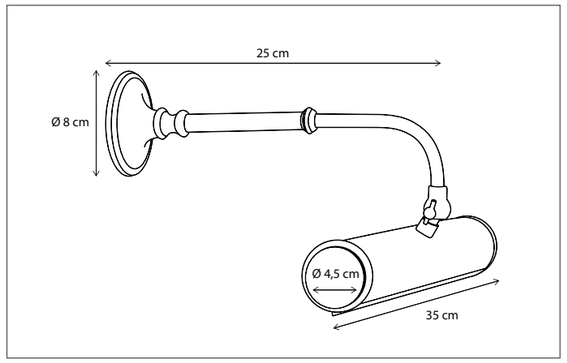

CODE	TYPE	FINISH	WATT	VOLT	FITTING
RUB001R35	Rubens wall on fixed arm	Bronze	2 x 6	230	E14
RUB101R35	Rubens wall on fixed arm	Brushed nickel	2 x 6	230	E14
RUB201R35	Rubens wall on fixed arm	Chrome	2 x 6	230	E14

Contact us for:

Customization & connectivity

Authentage Catalogus 2024 Authentage Katalogus 2024 Authentage Catalogue 2024 Authentage Katalog 2024 Authentage Verlichting Authentage Lighting Authentage éclairage Authentage Beleuchtung
Authentage Webshop Authentage Verlichting Authentage Armaturen Authentage Winkels Authentage Verkooppunten Authentage Verdelers Authentage Verdeelpunten Authentage België Authentage Nederland Authentage Vente en Ligne Authentage Boutique Vente en Ligne Authentage Luminaires Authentage éclairage
Authentage Revendeurs Authentage Points de vente Authentage Magasins Authentage Boutiques Authentage Points de distribution Authentage France Authentage Lighting Authentage Retailers Authentage Dealers Authentage Distributors Authentage Points of sale Authentage Resellers Authentage England
Authentage Beleuchtung Authent Beleuchtung Authentage Leuchten Authentage Händler Authentage Shops Authentage Verkaufsstellen Authentage Vertriebspartner Authentage Deutschland Authentage E-shop Authentage Geschäfte Authentage Vertriebsstellen

www.Bcosy.be - Waarschoot - België - Belgique - Belgium - Belgien tel 0032 (0) 9 378 24 30 Mail: info@bcosy.be

BELLEFEU® 300

BELLEFEU® ON BATTERY 303

VITRINE 308

MICRO 310

COMETE 311

Q-BRI 314

RUBENS 315

TUBELUM 316

SEVERE 317

Table

INDOOR



CATALOGUE I INDOOR I TABLE

Authentage Catalogus 2024 Authentage Katalogus 2024 Authentage Catalogue 2024 Authentage Katalog 2024 Authentage Verlichting Authentage Lighting Authentage éclairage Authentage Beleuchtung
Authentage Webshop Authentage Verlichting Authentage Armaturen Authentage Winkels Authentage Verkooppunten Authentage Verdelers Authentage Verdeelpunten Authentage België Authentage Nederland Authentage Vente en Ligne Authentage Boutique Vente en Ligne Authentage Luminaires Authentage éclairage
Authentage Revendeurs Authentage Points de vente Authentage Magasins Authentage Boutiques Authentage Points de distribution Authentage France Authentage Lighting Authentage Retailers Authentage Dealers Authentage Distributors Authentage Points of sale Authentage Resellers Authentage England
Authentage Beleuchtung Authent Beleuchtung Authentage Leuchten Authentage Händler Authentage Shops Authentage Verkaufsstellen Authentage Vertriebspartner Authentage Deutschland Authentage E-shop Authentage Geschäfte Authentage Vertriebsstellen

www.Bcosy.be - Waarschoot - België - Belgique - Belgium - Belgien tel 0032 (0) 9 378 24 30 Mail: info@bcosy.be



Integrated push dimmer for adjustable candle effect.

For control/connectivity options, see p494 accessories.



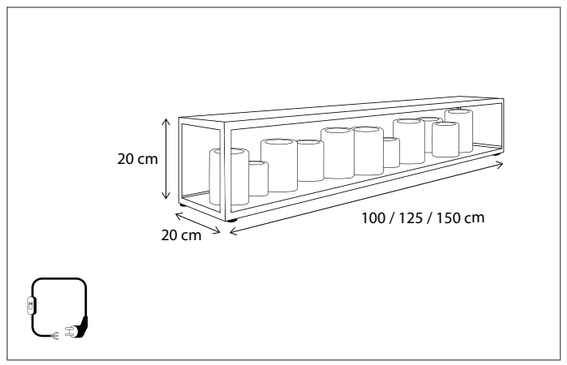

CODE	TYPE	FINISH	WATT	VOLT	FITTING
BVT009D10	Bellefeu® vitrine table long 100 cm - 9 candles wax	Bronze	9 x 2,4	230	-
BVT011D12	Bellefeu® vitrine table long 125 cm - 11 candles wax	Bronze	11 x 2,4	230	-
BVT014D15	Bellefeu® vitrine table long 150 cm - 14 candles wax	Bronze	14 x 2,4	230	-
BVT109D10	Bellefeu® vitrine table long 100 cm - 9 candles wax	Brushed nickel	9 x 2,4	230	-
BVT111D12	Bellefeu® vitrine table long 125 cm - 11 candles wax	Brushed nickel	11 x 2,4	230	-
BVT114D15	Bellefeu® vitrine table long 150 cm - 14 candles wax	Brushed nickel	14 x 2,4	230	-
BVT209D10	Bellefeu® vitrine table long 100 cm - 9 candles wax	Chrome	9 x 2,4	230	-
BVT211D12	Bellefeu® vitrine table long 125 cm - 11 candles wax	Chrome	11 x 2,4	230	-
BVT214D15	Bellefeu® vitrine table long 150 cm - 14 candles wax	Chrome	14 x 2,4	230	-

Contact us for:
Customization & connectivity

BELLEFEU®
VITRINE LONG

TABLE

CODE	TYPE	FINISH	WATT	VOLT	FITTING
BAT009D10	Bellefeu® vitrine table long 100 cm - 9 candles alabaster	Bronze	9 x 2,4	230	-
BAT011D12	Bellefeu® vitrine table long 125 cm - 11 candles alabaster	Bronze	11 x 2,4	230	-
BAT014D15	Bellefeu® vitrine table long 150 cm - 14 candles alabaster	Bronze	14 x 2,4	230	-
BAT109D10	Bellefeu® vitrine table long 100 cm - 9 candles alabaster	Brushed nickel	9 x 2,4	230	-
BAT111D12	Bellefeu® vitrine table long 125 cm - 11 candles alabaster	Brushed nickel	11 x 2,4	230	-
BAT114D15	Bellefeu® vitrine table long 150 cm - 14 candles alabaster	Brushed nickel	14 x 2,4	230	-
BAT209D10	Bellefeu® vitrine table long 100 cm - 9 candles alabaster	Chrome	9 x 2,4	230	-
BAT211D12	Bellefeu® vitrine table long 125 cm - 11 candles alabaster	Chrome	11 x 2,4	230	-
BAT214D15	Bellefeu® vitrine table long 150 cm - 14 candles alabaster	Chrome	14 x 2,4	230	-

Contact us for:
Customization & connectivity

SCAN & DISCOVER
THE BELLEFEU EFFECT

Authentage Catalogus 2024 Authentage Katalogus 2024 Authentage Catalogue 2024 Authentage Katalog 2024 Authentage Verlichting Authentage Lighting Authentage éclairage Authentage Beleuchtung
Authentage Webshop Authentage Verlichting Authentage Armaturen Authentage Winkels Authentage Verkooppunten Authentage Verdelers Authentage Verdeelpunten Authentage België Authentage Nederland Authentage Vente en Ligne Authentage Boutique Vente en Ligne Authentage Luminaires Authentage éclairage
Authentage Revendeurs Authentage Points de vente Authentage Magasins Authentage Boutiques Authentage Points de distribution Authentage France Authentage Lighting Authentage Retailers Authentage Dealers Authentage Distributors Authentage Points of sale Authentage Resellers Authentage England
Authentage Beleuchtung Authent Beleuchtung Authentage Leuchten Authentage Händler Authentage Shops Authentage Verkaufsstellen Authentage Vertriebspartner Authentage Deutschland Authentage E-shop Authentage Geschäfte Authentage Vertriebsstellen

www.Bcosy.be - Waarschoot - België - Belgique - Belgium - Belgien tel 0032 (0) 9 378 24 30 Mail: info@bcosy.be

BELLEFEU® VITRINE

TABLE

Integrated push dimmer for adjustable candle effect.

For control/connectivity options, see p494 accessories.



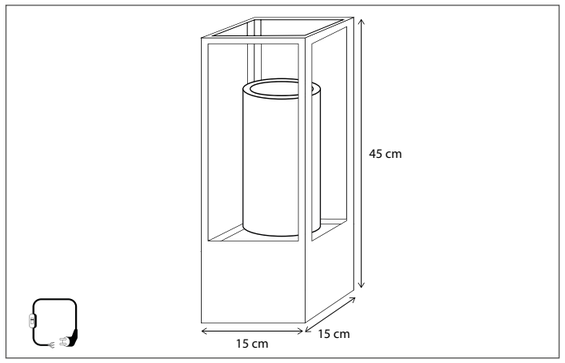

CODE	TYPE	FINISH	WATT	VOLT	FITTING
BVT001D45	Bellefeu® vitrine table - 1 candle wax	Bronze	2,4	230	-
BVT101D45	Bellefeu® vitrine table - 1 candle wax	Brushed nickel	2,4	230	-
BVT201D45	Bellefeu® vitrine table - 1 candle wax	Chrome	2,4	230	-
BAT001D45	Bellefeu® vitrine table - 1 candle alabaster	Bronze	2,4	230	-
BAT101D45	Bellefeu® vitrine table - 1 candle alabaster	Brushed nickel	2,4	230	-
BAT201D45	Bellefeu® vitrine table - 1 candle alabaster	Chrome	2,4	230	-

SCAN & DISCOVER
THE BELLEFEU EFFECT

Contact us for:
Customization & connectivity

BELLEFEU® ON BATTERY

TABLE

Charging Li-Ion battery takes 3 hours.
Autonomy of the lamp is 40 hours in maximum mode.
AC/DC charger with plug connector is included.

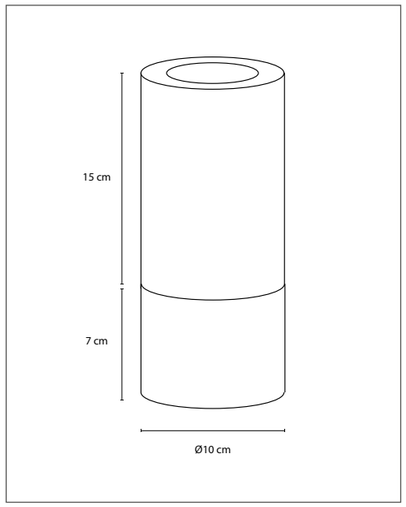



CODE	TYPE	FINISH	WATT	VOLT	FITTING
BTT001A15	Bellefeu® on battery indoor - 1 candle wax	Bronze	2,4	230-24	-
BAT001A15	Bellefeu® on battery indoor - 1 candle alabaster	Bronze	2,4	230-24	-

Contact us for:
Customization & connectivity

Authentage Catalogus 2024 Authentage Katalogus 2024 Authentage Catalogue 2024 Authentage Katalog 2024 Authentage Verlichting Authentage Lighting Authentage éclairage Authentage Beleuchtung
Authentage Webshop Authentage Verlichting Authentage Armaturen Authentage Winkels Authentage Verkooppunten Authentage Verdelers Authentage Verdeelpunten Authentage België Authentage Nederland Authentage Vente en Ligne Authentage Boutique Vente en Ligne Authentage Luminaires Authentage éclairage
Authentage Revendeurs Authentage Points de vente Authentage Magasins Authentage Boutiques Authentage Points de distribution Authentage France Authentage Lighting Authentage Retailers Authentage Dealers Authentage Distributors Authentage Points of sale Authentage Resellers Authentage England
Authentage Beleuchtung Authent Beleuchtung Authentage Leuchten Authentage Händler Authentage Shops Authentage Verkaufsstellen Authentage Vertriebspartner Authentage Deutschland Authentage E-shop Authentage Geschäfte Authentage Vertriebsstellen

www.Bcosy.be - Waarschoot - België - Belgique - Belgium - Belgien tel 0032 (0) 9 378 24 30 Mail: info@bcosy.be



Integrated push dimmer for adjustable candle effect.

For control/connectivity options, see p494 accessories



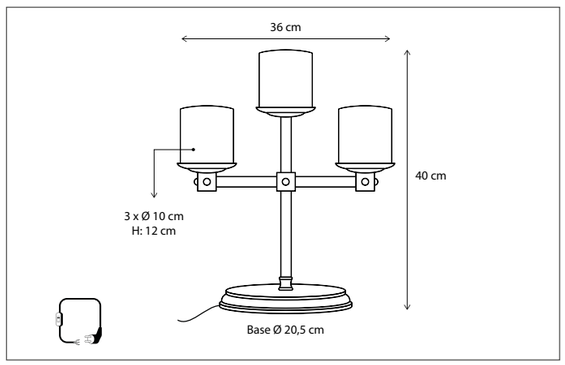

CODE	TYPE	FINISH	WATT	VOLT	FITTING
BCH001T15	Bellefeu® chandelier table - 1 candle wax	Bronze	2,4	230	-
BCH002T15	Bellefeu® chandelier table - 2 candles wax	Bronze	2 x 2,4	230	-
BCH003T20	Bellefeu® chandelier table - 3 candles wax	Bronze	3 x 2,4	230	-
BCH005T20	Bellefeu® chandelier table - 5 candles wax	Bronze	5 x 2,4	230	-
BCH101T15	Bellefeu® chandelier table - 1 candle wax	Brushed nickel	2,4	230	-
BCH102T15	Bellefeu® chandelier table - 2 candles wax	Brushed nickel	2 x 2,4	230	-
BCH103T20	Bellefeu® chandelier table - 3 candles wax	Brushed nickel	3 x 2,4	230	-
BCH105T20	Bellefeu® chandelier table - 5 candles wax	Brushed nickel	5 x 2,4	230	-
BCH201T15	Bellefeu® chandelier table - 1 candle wax	Chrome	2,4	230	-
BCH202T15	Bellefeu® chandelier table - 2 candles wax	Chrome	2 x 2,4	230	-
BCH203T20	Bellefeu® chandelier table - 3 candles wax	Chrome	3 x 2,4	230	-
BCH205T20	Bellefeu® chandelier table - 5 candles wax	Chrome	5 x 2,4	230	-

Contact us for:

Customization & connectivity

CODE	TYPE	FINISH	WATT	VOLT	FITTING
BAH001T15	Bellefeu® chandelier table - 1 candle alabaster	Bronze	2,4	230	-
BAH002T15	Bellefeu® chandelier table - 2 candles alabaster	Bronze	2 x 2,4	230	-
BAH003T20	Bellefeu® chandelier table - 3 candles alabaster	Bronze	3 x 2,4	230	-
BAH005T20	Bellefeu® chandelier table - 5 candles alabaster	Bronze	5 x 2,4	230	-
BAH101T15	Bellefeu® chandelier table - 1 candle alabaster	Brushed nickel	2,4	230	-
BAH102T15	Bellefeu® chandelier table - 2 candles alabaster	Brushed nickel	2 x 2,4	230	-
BAH103T20	Bellefeu® chandelier table - 3 candles alabaster	Brushed nickel	3 x 2,4	230	-
BAH105T20	Bellefeu® chandelier table - 5 candles alabaster	Brushed nickel	5 x 2,4	230	-
BAH201T15	Bellefeu® chandelier table - 1 candle alabaster	Chrome	2,4	230	-
BAH202T15	Bellefeu® chandelier table - 2 candles alabaster	Chrome	2 x 2,4	230	-
BAH203T20	Bellefeu® chandelier table - 3 candles alabaster	Chrome	3 x 2,4	230	-
BAH205T20	Bellefeu® chandelier table - 5 candles alabaster	Chrome	5 x 2,4	230	-

Contact us for:

Customization & connectivity

SCAN & DISCOVER

THE BELLEFEU EFFECT

INDOOR I TABLE I BELLEFEU®

Authentage Catalogus 2024 Authentage Katalogus 2024 Authentage Catalogue 2024 Authentage Katalog 2024 Authentage Verlichting Authentage Lighting Authentage éclairage Authentage Beleuchtung
Authentage Webshop Authentage Verlichting Authentage Armaturen Authentage Winkels Authentage Verkooppunten Authentage Verdelers Authentage Verdeelpunten Authentage België Authentage Nederland Authentage Vente en Ligne Authentage Boutique Vente en Ligne Authentage Luminaires Authentage éclairage
Authentage Revendeurs Authentage Points de vente Authentage Magasins Authentage Boutiques Authentage Points de distribution Authentage France Authentage Lighting Authentage Retailers Authentage Dealers Authentage Distributors Authentage Points of sale Authentage Resellers Authentage England
Authentage Beleuchtung Authent Beleuchtung Authentage Leuchten Authentage Händler Authentage Shops Authentage Verkaufsstellen Authentage Vertriebspartner Authentage Deutschland Authentage E-shop Authentage Geschäfte Authentage Vertriebsstellen

www.Bcosy.be - Waarschoot - België - Belgique - Belgium - Belgien tel 0032 (0) 9 378 24 30 Mail: info@bcosy.be



Integrated push dimmer for adjustable candle effect.

For control/connectivity options, see p494 accessories.





CODE	TYPE	FINISH	WATT	VOLT	FITTING
BTT001D15	Bellefeu® table set dia 10 cm - 1 candle wax	Bronze	2,4	230	-
BTF001D15	Bellefeu® table set dia 12 cm - 1 candle wax	Bronze	2,4	230	-
BTS003D03	Bellefeu® table set - 3 candles wax	Bronze	3 x 2,4	230	-
BTS006D06	Bellefeu® table set - 6 candles wax	Bronze	6 x 2,4	230	-
BTT101D15	Bellefeu® table set dia 10 cm - 1 candle wax	Brushed nickel	2,4	230	-
BTF101D15	Bellefeu® table set dia 12 cm - 1 candle wax	Brushed nickel	2,4	230	-
BTS103D03	Bellefeu® table set - 3 candles wax	Brushed nickel	3 x 2,4	230	-
BTS106D06	Bellefeu® table set - 6 candles wax	Brushed nickel	6 x 2,4	230	-
BTT201D15	Bellefeu® table set dia 10 cm - 1 candle wax	Chrome	2,4	230	-
BTF201D15	Bellefeu® table set dia 12 cm - 1 candle wax	Chrome	2,4	230	-
BTS203D03	Bellefeu® table set - 3 candles wax	Chrome	3 x 2,4	230	-
BTS206D06	Bellefeu® table set - 6 candles wax	Chrome	6 x 2,4	230	-

Contact us for:

Customization & connectivity

BELLEFEU® TABLE SET

TABLE

CODE	TYPE	FINISH	WATT	VOLT	FITTING
BAT001D15	Bellefeu® table set dia 10 cm - 1 candle alabaster	Bronze	2,4	230	-
BAF001D15	Bellefeu® table set dia 12 cm - 1 candle alabaster	Bronze	2,4	230	-
BAS003D03	Bellefeu® table set - 3 candles alabaster	Bronze	3 x 2,4	230	-
BAS006D06	Bellefeu® table set - 6 candles alabaster	Bronze	6 x 2,4	230	-
BAT101D15	Bellefeu® table set dia 10 cm - 1 candle alabaster	Brushed nickel	2,4	230	-
BAF101D15	Bellefeu® table set dia 12 cm - 1 candle alabaster	Brushed nickel	2,4	230	-
BAS103D03	Bellefeu® table set - 3 candles alabaster	Brushed nickel	3 x 2,4	230	-
BAS106D06	Bellefeu® table set - 6 candles alabaster	Brushed nickel	6 x 2,4	230	-
BAT201D15	Bellefeu® table set dia 10 cm - 1 candle alabaster	Chrome	2,4	230	-
BAF201D15	Bellefeu® table set dia 12 cm - 1 candle alabaster	Chrome	2,4	230	-
BAS203D03	Bellefeu® table set - 3 candles alabaster	Chrome	3 x 2,4	230	-
BAS206D06	Bellefeu® table set - 6 candles alabaster	Chrome	6 x 2,4	230	-

Contact us for:

Customization & connectivity

SCAN & DISCOVER

THE BELLEFEU EFFECT

INDOOR I TABLE I BELLEFEU®

Authentage Catalogus 2024 Authentage Katalogus 2024 Authentage Catalogue 2024 Authentage Katalog 2024 Authentage Verlichting Authentage Lighting Authentage éclairage Authentage Beleuchtung
Authentage Webshop Authentage Verlichting Authentage Armaturen Authentage Winkels Authentage Verkooppunten Authentage Verdelers Authentage Verdeelpunten Authentage België Authentage Nederland Authentage Vente en Ligne Authentage Boutique Vente en Ligne Authentage Luminaires Authentage éclairage
Authentage Revendeurs Authentage Points de vente Authentage Magasins Authentage Boutiques Authentage Points de distribution Authentage France Authentage Lighting Authentage Retailers Authentage Dealers Authentage Distributors Authentage Points of sale Authentage Resellers Authentage England
Authentage Beleuchtung Authent Beleuchtung Authentage Leuchten Authentage Händler Authentage Shops Authentage Verkaufsstellen Authentage Vertriebspartner Authentage Deutschland Authentage E-shop Authentage Geschäfte Authentage Vertriebsstellen

www.Bcosy.be - Waarschoot - België - Belgique - Belgium - Belgien tel 0032 (0) 9 378 24 30 Mail: info@bcosy.be

VITRINE LANTERN

TABLE

IP 20

Lamps not included, consult light source guide for our advice.



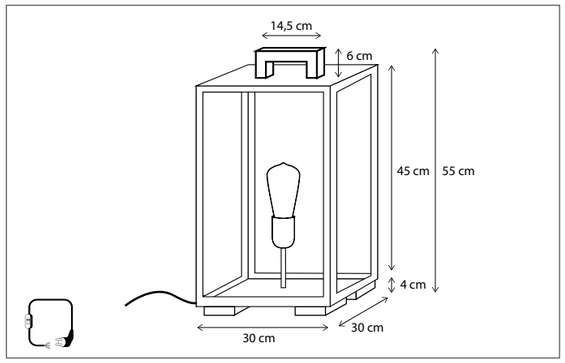

CODE	TYPE	FINISH	WATT	VOLT	FITTING
VIT001448	Vitrine table lantern	Bronze	15	230	E27
VIT101448	Vitrine table lantern	Brushed nickel	15	230	E27
VIT201448	Vitrine table lantern	Chrome	15	230	E27

Contact us for:
Customization & connectivity

VITRINE

TABLE

IP 20

Lamps not included, consult light source guide for our advice.

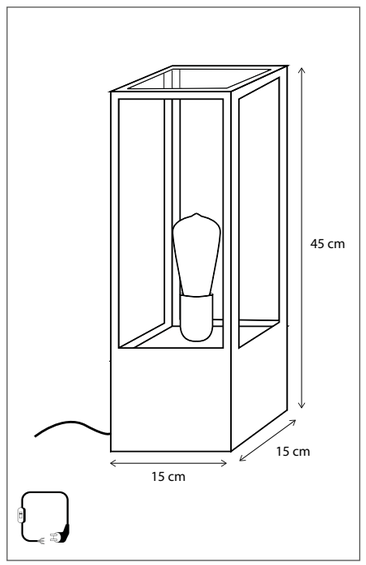



CODE	TYPE	FINISH	WATT	VOLT	FITTING
VIT001419	Vitrine table	Bronze	15	230	E27
VIT101419	Vitrine table	Brushed nickel	15	230	E27
VIT201419	Vitrine table	Chrome	15	230	E27

Contact us for:
Customization & connectivity

INDOOR I TABLE I VITRINE

Authentage Catalogus 2024 Authentage Katalogus 2024 Authentage Catalogue 2024 Authentage Katalog 2024 Authentage Verlichting Authentage Lighting Authentage éclairage Authentage Beleuchtung
Authentage Webshop Authentage Verlichting Authentage Armaturen Authentage Winkels Authentage Verkooppunten Authentage Verdelers Authentage Verdeelpunten Authentage België Authentage Nederland Authentage Vente en Ligne Authentage Boutique Vente en Ligne Authentage Luminaires Authentage éclairage
Authentage Revendeurs Authentage Points de vente Authentage Magasins Authentage Boutiques Authentage Points de distribution Authentage France Authentage Lighting Authentage Retailers Authentage Dealers Authentage Distributors Authentage Points of sale Authentage Resellers Authentage England
Authentage Beleuchtung Authent Beleuchtung Authentage Leuchten Authentage Händler Authentage Shops Authentage Verkaufsstellen Authentage Vertriebspartner Authentage Deutschland Authentage E-shop Authentage Geschäfte Authentage Vertriebsstellen

www.Bcosy.be - Waarschoot - België - Belgique - Belgium - Belgien tel 0032 (0) 9 378 24 30 Mail: info@bcosy.be

MICRO TRIPOD

TABLE

IP 20

For warmer light, add Kelvin Killer® see p474.
For enhanced light dispersion or anti-glare effect, add frosted glass filter see p474.
Lamps not included, consult light source guide for our advice.



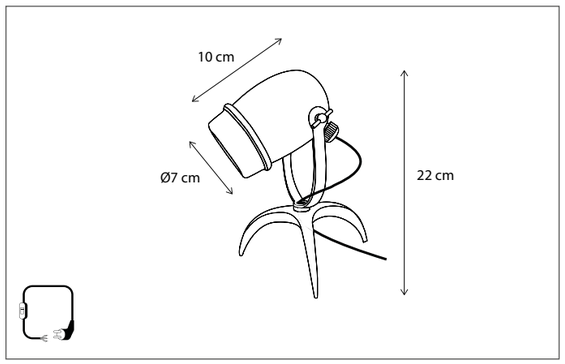

CODE	TYPE	FINISH	WATT	VOLT	FITTING
MIC001TRI	Micro tripod	Bronze	6	230	GU10
MIC101TRI	Micro tripod	Brushed nickel	6	230	GU10
MIC201TRI	Micro tripod	Chrome	6	230	GU10

SCAN & DISCOVER
OUR PATENTED KELVIN KILLER®

Contact us for:
Customization & connectivity

COMETE TRIPOD

TABLE

IP 20

Lamps not included, consult light source guide for our advice.

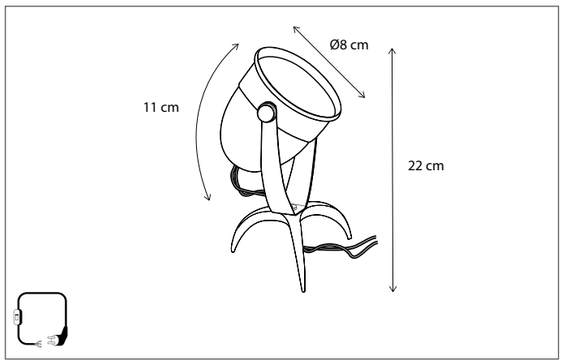



CODE	TYPE	FINISH	WATT	VOLT	FITTING
COL001T03	Comète tripod	Bronze	8	230	GU10
COL101T03	Comète tripod	Brushed nickel	8	230	GU10
COL201T03	Comète tripod	Chrome	8	230	GU10

Contact us for:
Customization & connectivity

Authentage Catalogus 2024 Authentage Katalogus 2024 Authentage Catalogue 2024 Authentage Katalog 2024 Authentage Verlichting Authentage Lighting Authentage éclairage Authentage Beleuchtung
Authentage Webshop Authentage Verlichting Authentage Armaturen Authentage Winkels Authentage Verkooppunten Authentage Verdelers Authentage Verdeelpunten Authentage België Authentage Nederland Authentage Vente en Ligne Authentage Boutique Vente en Ligne Authentage Luminaires Authentage éclairage
Authentage Revendeurs Authentage Points de vente Authentage Magasins Authentage Boutiques Authentage Points de distribution Authentage France Authentage Lighting Authentage Retailers Authentage Dealers Authentage Distributors Authentage Points of sale Authentage Resellers Authentage England
Authentage Beleuchtung Authent Beleuchtung Authentage Leuchten Authentage Händler Authentage Shops Authentage Verkaufsstellen Authentage Vertriebspartner Authentage Deutschland Authentage E-shop Authentage Geschäfte Authentage Vertriebsstellen

www.Bcosy.be - Waarschoot - België - Belgique - Belgium - Belgien tel 0032 (0) 9 378 24 30 Mail: info@bcosy.be

Q-BRI

TABLE

Integrated LED (2700K).



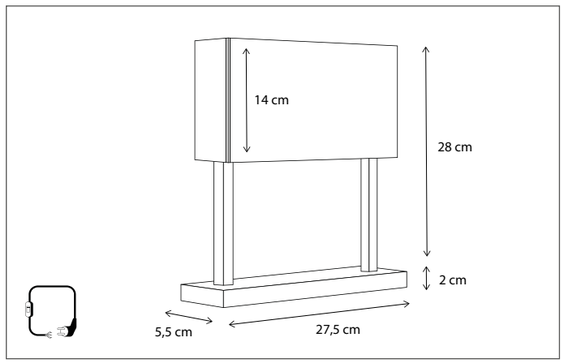

CODE	TYPE	FINISH	WATT	VOLT	FITTING
QBR0L5T02	Q-Bri table - 2700K	Bronze	6	230	-
QBR1L5T02	Q-Bri table - 2700K	Brushed nickel	6	230	-
QBR2L5T02	Q-Bri table - 2700K	Chrome	6	230	
QBR9L5T02	Q-Bri table - 2700K	Ready for painting	6	230	-

Contact us for:

Customization & connectivity

RUBENS

TABLE

Lamps not included, consult light source guide for our advice.

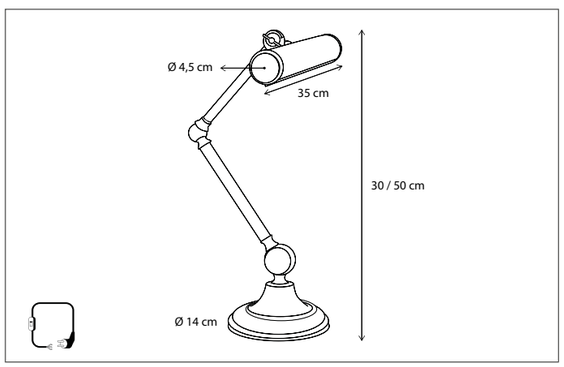



CODE	TYPE	FINISH	WATT	VOLT	FITTING
RUB001TT3	Rubens table	Bronze	2 x 6	230	E14
RUB101TT3	Rubens table	Brushed nickel	2 x 6	230	E14
RUB201TT3	Rubens table	Chrome	2 x 6	230	E14

Contact us for:

Customization & connectivity

Authentage Catalogus 2024 Authentage Katalogus 2024 Authentage Catalogue 2024 Authentage Katalog 2024 Authentage Verlichting Authentage Lighting Authentage éclairage Authentage Beleuchtung
Authentage Webshop Authentage Verlichting Authentage Armaturen Authentage Winkels Authentage Verkooppunten Authentage Verdelers Authentage Verdeelpunten Authentage België Authentage Nederland Authentage Vente en Ligne Authentage Boutique Vente en Ligne Authentage Luminaires Authentage éclairage
Authentage Revendeurs Authentage Points de vente Authentage Magasins Authentage Boutiques Authentage Points de distribution Authentage France Authentage Lighting Authentage Retailers Authentage Dealers Authentage Distributors Authentage Points of sale Authentage Resellers Authentage England
Authentage Beleuchtung Authent Beleuchtung Authentage Leuchten Authentage Händler Authentage Shops Authentage Verkaufsstellen Authentage Vertriebspartner Authentage Deutschland Authentage E-shop Authentage Geschäfte Authentage Vertriebsstellen

www.Bcosy.be - Waarschoot - België - Belgique - Belgium - Belgien tel 0032 (0) 9 378 24 30 Mail: info@bcosy.be

TUBELUM DESK

TABLE

IP 20

The light source is easy to move up and down, enabling you to change the light effect.
Inside is polished brass to create a warm glow.

Lamps not included, consult light source guide for our advice.



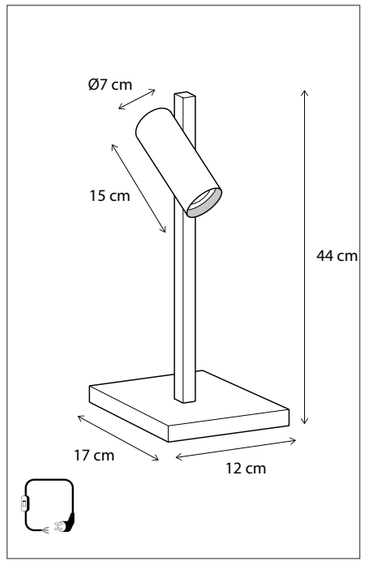

CODE	TYPE	FINISH	WATT	VOLT	FITTING
TBL001TAB	Tubelum desk	Bronze	8	230	GU10

Contact us for:
Customization & connectivity

SEVERE

TABLE

IP 20

Shades not included, see p479 accessories for different options.
Lamps not included, consult light source guide for our advice.

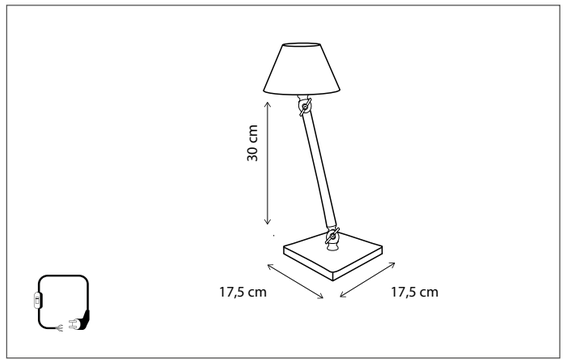



CODE	TYPE	FINISH	WATT	VOLT	FITTING
SEV001T30	Sévère table 1L 30 cm	Bronze	6	230	E14
SEV101T30	Sévère table 1L 30 cm	Brushed nickel	6	230	E14
SEV201T30	Sévère table 1L 30 cm	Chrome	6	230	E14

Contact us for:
Customization & connectivity

Authentage Catalogus 2024 Authentage Katalogus 2024 Authentage Catalogue 2024 Authentage Katalog 2024 Authentage Verlichting Authentage Lighting Authentage éclairage Authentage Beleuchtung
Authentage Webshop Authentage Verlichting Authentage Armaturen Authentage Winkels Authentage Verkooppunten Authentage Verdelers Authentage Verdeelpunten Authentage België Authentage Nederland Authentage Vente en Ligne Authentage Boutique Vente en Ligne Authentage Luminaires Authentage éclairage
Authentage Revendeurs Authentage Points de vente Authentage Magasins Authentage Boutiques Authentage Points de distribution Authentage France Authentage Lighting Authentage Retailers Authentage Dealers Authentage Distributors Authentage Points of sale Authentage Resellers Authentage England
Authentage Beleuchtung Authent Beleuchtung Authentage Leuchten Authentage Händler Authentage Shops Authentage Verkaufsstellen Authentage Vertriebspartner Authentage Deutschland Authentage E-shop Authentage Geschäfte Authentage Vertriebsstellen

www.Bcosy.be - Waarschoot - België - Belgique - Belgium - Belgien tel 0032 (0) 9 378 24 30 Mail: info@bcosy.be

BELLEFEU® 320
MICRO 328
MATISSE 329
MACRO 330
TUBELUM 331
ELIGNE 333
LISIBLE 334
LIT 337

Floor

INDOOR



CATALOGUE I INDOOR I FLOOR

Authentage Catalogus 2024 Authentage Katalogus 2024 Authentage Catalogue 2024 Authentage Katalog 2024 Authentage Verlichting Authentage Lighting Authentage éclairage Authentage Beleuchtung
Authentage Webshop Authentage Verlichting Authentage Armaturen Authentage Winkels Authentage Verkooppunten Authentage Verdelers Authentage Verdeelpunten Authentage België Authentage Nederland Authentage Vente en Ligne Authentage Boutique Vente en Ligne Authentage Luminaires Authentage éclairage
Authentage Revendeurs Authentage Points de vente Authentage Magasins Authentage Boutiques Authentage Points de distribution Authentage France Authentage Lighting Authentage Retailers Authentage Dealers Authentage Distributors Authentage Points of sale Authentage Resellers Authentage England
Authentage Beleuchtung Authent Beleuchtung Authentage Leuchten Authentage Händler Authentage Shops Authentage Verkaufsstellen Authentage Vertriebspartner Authentage Deutschland Authentage E-shop Authentage Geschäfte Authentage Vertriebsstellen

www.Bcosy.be - Waarschoot - België - Belgique - Belgium - Belgien tel 0032 (0) 9 378 24 30 Mail: info@bcosy.be

BELLEFEU® VITRINE LANTERN

FLOOR

Integrated push dimmer for adjustable candle effect.

For control/connectivity options, see p494 accessories.



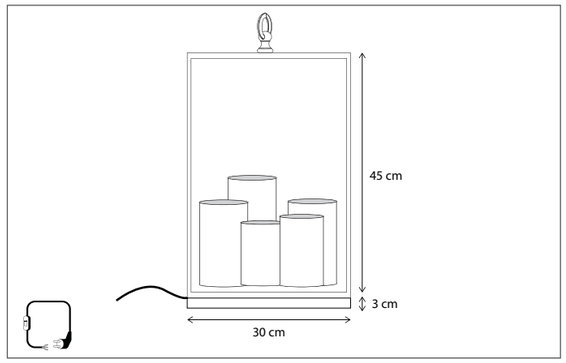

CODE	TYPE	FINISH	WATT	VOLT	FITTING
BVL005D48	Bellefeu® vitrine lantern - 5 candles wax	Bronze	5 x 2,4	230	-
BVL105D48	Bellefeu® vitrine lantern - 5 candles wax	Brushed nickel	5 x 2,4	230	-
BVL205D48	Bellefeu® vitrine lantern - 5 candles wax	Chrome	5 x 2,4	230	-
BAL005D48	Bellefeu® vitrine lantern - 5 candles alabaster	Bronze	5 x 2,4	230	-
BAL105D48	Bellefeu® vitrine lantern - 5 candles alabaster	Brushed nickel	5 x 2,4	230	-
BAL205D48	Bellefeu® vitrine lantern - 5 candles alabaster	Chrome	5 x 2,4	230	-

SCAN & DISCOVER
THE BELLEFEU EFFECT

Contact us for:
Customization & connectivity

BELLEFEU® CHANDELIER

FLOOR

Integrated push dimmer for adjustable candle effect.

For control/connectivity options, see p494 accessories.

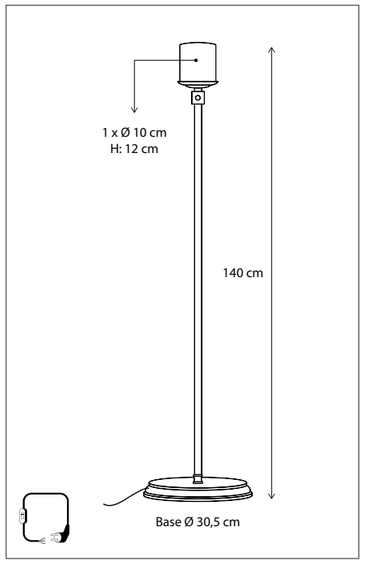



CODE	TYPE	FINISH	WATT	VOLT	FITTING
BCH001F30	Bellefeu® chandelier floor - 1 candle wax	Bronze	2,4	230	-
BCH003F36	Bellefeu® chandelier floor - 3 candles wax	Bronze	3 x 2,4	230	-
BCH005F36	Bellefeu® chandelier floor - 5 candles wax	Bronze	5 x 2,4	230	-
BCH101F30	Bellefeu® chandelier floor - 1 candle wax	Brushed nickel	2,4	230	-
BCH103F36	Bellefeu® chandelier floor - 3 candles wax	Brushed nickel	3 x 2,4	230	-
BCH105F36	Bellefeu® chandelier floor - 5 candles wax	Brushed nickel	5 x 2,4	230	-
BCH201F30	Bellefeu® chandelier floor - 1 candle wax	Chrome	2,4	230	-
BCH203F36	Bellefeu® chandelier floor - 3 candles wax	Chrome	3 x 2,4	230	-
BCH205F36	Bellefeu® chandelier floor - 5 candles wax	Chrome	5 x 2,4	230	-

See next page for more models.

Contact us for:
Customization & connectivity

INDOOR I FLOOR I BELLEFEU®

Authentage Catalogus 2024 Authentage Katalogus 2024 Authentage Catalogue 2024 Authentage Katalog 2024 Authentage Verlichting Authentage Lighting Authentage éclairage Authentage Beleuchtung
Authentage Webshop Authentage Verlichting Authentage Armaturen Authentage Winkels Authentage Verkooppunten Authentage Verdelers Authentage Verdeelpunten Authentage België Authentage Nederland Authentage Vente en Ligne Authentage Boutique Vente en Ligne Authentage Luminaires Authentage éclairage
Authentage Revendeurs Authentage Points de vente Authentage Magasins Authentage Boutiques Authentage Points de distribution Authentage France Authentage Lighting Authentage Retailers Authentage Dealers Authentage Distributors Authentage Points of sale Authentage Resellers Authentage England
Authentage Beleuchtung Authent Beleuchtung Authentage Leuchten Authentage Händler Authentage Shops Authentage Verkaufsstellen Authentage Vertriebspartner Authentage Deutschland Authentage E-shop Authentage Geschäfte Authentage Vertriebsstellen

www.Bcosy.be - Waarschoot - België - Belgique - Belgium - Belgien tel 0032 (0) 9 378 24 30 Mail: info@bcosy.be

BELLEFEU® CHANDELIER

FLOOR

CODE	TYPE	FINISH	WATT	VOLT	FITTING
BAH001F30	Bellefeu® chandelier floor - 1 candle alabaster	Bronze	2,4	230	-
BAH003F36	Bellefeu® chandelier floor - 3 candles alabaster	Bronze	3 x 2,4	230	-
BAH005F36	Bellefeu® chandelier floor - 5 candles alabaster	Bronze	5 x 2,4	230	-
BAH101F30	Bellefeu® chandelier floor - 1 candle alabaster	Brushed nickel	2,4	230	-
BAH103F36	Bellefeu® chandelier floor - 3 candles alabaster	Brushed nickel	3 x 2,4	230	-
BAH105F36	Bellefeu® chandelier floor - 5 candles alabaster	Brushed nickel	5 x 2,4	230	-
BAH201F30	Bellefeu® chandelier floor - 1 candle alabaster	Chrome	2,4	230	-
BAH203F36	Bellefeu® chandelier floor - 3 candles alabaster	Chrome	3 x 2,4	230	-
BAH205F36	Bellefeu® chandelier floor - 5 candles alabaster	Chrome	5 x 2,4	230	-

SCAN & DISCOVER
THE BELLEFEU EFFECT

Contact us for:
Customization & connectivity



Authentage Catalogus 2024 Authentage Katalogus 2024 Authentage Catalogue 2024 Authentage Katalog 2024 Authentage Verlichting Authentage Lighting Authentage éclairage Authentage Beleuchtung
Authentage Webshop Authentage Verlichting Authentage Armaturen Authentage Winkels Authentage Verkooppunten Authentage Verdelers Authentage Verdeelpunten Authentage België Authentage Nederland Authentage Vente en Ligne Authentage Boutique Vente en Ligne Authentage Luminaires Authentage éclairage
Authentage Revendeurs Authentage Points de vente Authentage Magasins Authentage Boutiques Authentage Points de distribution Authentage France Authentage Lighting Authentage Retailers Authentage Dealers Authentage Distributors Authentage Points of sale Authentage Resellers Authentage England
Authentage Beleuchtung Authent Beleuchtung Authentage Leuchten Authentage Händler Authentage Shops Authentage Verkaufsstellen Authentage Vertriebspartner Authentage Deutschland Authentage E-shop Authentage Geschäfte Authentage Vertriebsstellen

www.Bcosy.be - Waarschoot - België - Belgique - Belgium - Belgien tel 0032 (0) 9 378 24 30 Mail: info@bcosy.be

BELLEFEU® VITRINE

FLOOR

Integrated push dimmer for adjustable candle effect.

For control/connectivity options, see p494 accessories.



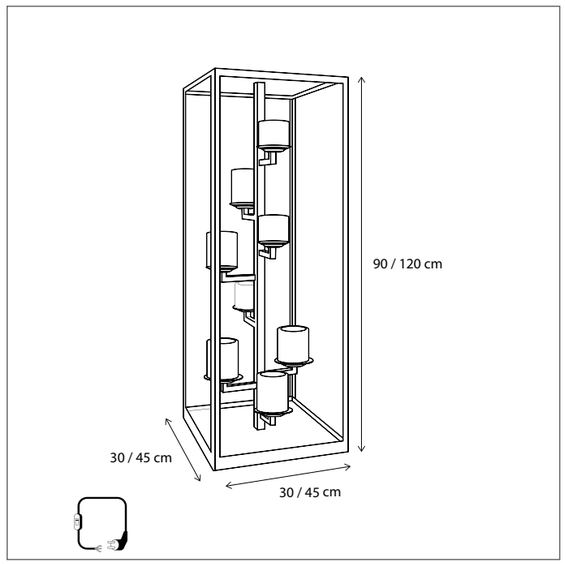

CODE	TYPE	FINISH	WATT	VOLT	FITTING
BVH008D30	Bellefeu® vitrine floor normal - 8 candles wax	Bronze	8 x 2,4	230	-
BVH014D45	Bellefeu® vitrine floor grande - 14 candles wax	Bronze	14 x 2,4	230	-
BVA008D30	Bellefeu® vitrine floor normal - 8 candles alabaster	Bronze	8 x 2,4	230	-
BVA014D45	Bellefeu® vitrine floor grande - 14 candles alabaster	Bronze	14 x 2,4	230	-

SCAN & DISCOVER
THE BELLEFEU EFFECT

Contact us for:
Customization & connectivity

BELLEFEU® GRACIEUZE

FLOOR

Integrated push dimmer for adjustable candle effect.

For control/connectivity options, see p494 accessories.

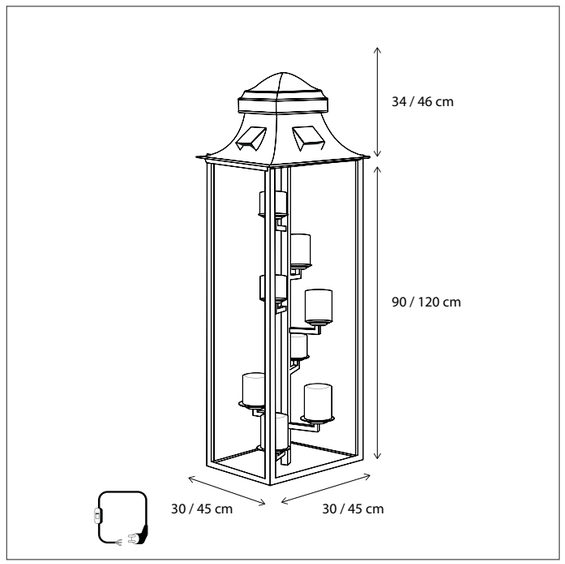



CODE	TYPE	FINISH	WATT	VOLT	FITTING
BGH008D30	Bellefeu® gracieuze floor normal - 8 candles wax	Bronze	8 x 2,4	230	-
BGH014D45	Bellefeu® gracieuze floor grande - 14 candles wax	Bronze	14 x 2,4	230	-
BGA008D30	Bellefeu® gracieuze floor normal - 8 candles alabaster	Bronze	8 x 2,4	230	-
BGA014D45	Bellefeu® gracieuze floor grande - 14 candles alabaster	Bronze	14 x 2,4	230	-

Contact us for:
Customization & connectivity

Authentage Catalogus 2024 Authentage Katalogus 2024 Authentage Catalogue 2024 Authentage Katalog 2024 Authentage Verlichting Authentage Lighting Authentage éclairage Authentage Beleuchtung
Authentage Webshop Authentage Verlichting Authentage Armaturen Authentage Winkels Authentage Verkooppunten Authentage Verdelers Authentage Verdeelpunten Authentage België Authentage Nederland Authentage Vente en Ligne Authentage Boutique Vente en Ligne Authentage Luminaires Authentage éclairage
Authentage Revendeurs Authentage Points de vente Authentage Magasins Authentage Boutiques Authentage Points de distribution Authentage France Authentage Lighting Authentage Retailers Authentage Dealers Authentage Distributors Authentage Points of sale Authentage Resellers Authentage England
Authentage Beleuchtung Authent Beleuchtung Authentage Leuchten Authentage Händler Authentage Shops Authentage Verkaufsstellen Authentage Vertriebspartner Authentage Deutschland Authentage E-shop Authentage Geschäfte Authentage Vertriebsstellen

www.Bcosy.be - Waarschoot - België - Belgique - Belgium - Belgien tel 0032 (0) 9 378 24 30 Mail: info@bcosy.be

MICRO

FLOOR

IP 20

For warmer light, add Kelvin Killer® see p474.
For enhanced light dispersion or anti-glare effect, add frosted glass filter see p474.
Lamp includes a floor slide dimmer.
Lamps not included, consult light source guide for our advice.



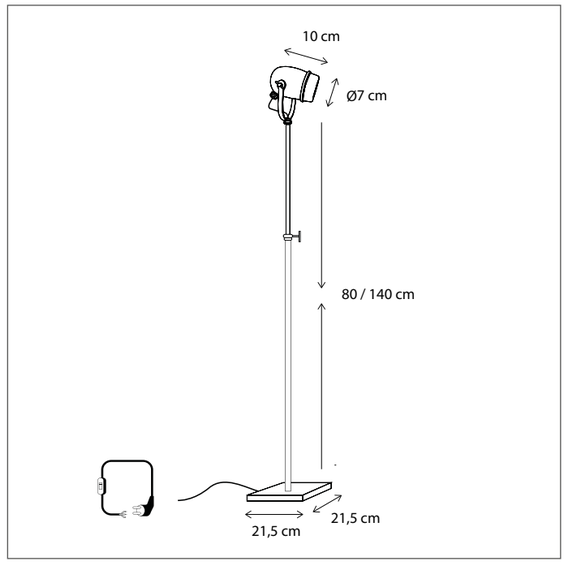

CODE	TYPE	FINISH	WATT	VOLT	FITTING
MIC001008	Micro floor	Bronze	6	230	GU10
MIC101008	Micro floor	Brushed nickel	6	230	GU10
MIC201008	Micro floor	Chrome	6	230	GU10

SCAN & DISCOVER
OUR PATENTED KELVIN KILLER®

Contact us for:
Customization & connectivity

MATISSE

FLOOR

IP 20 DI

Integrated LED (2700K).

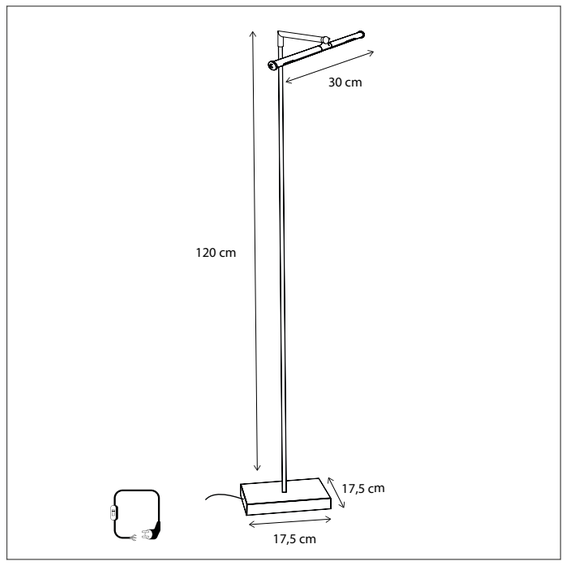



CODE	TYPE	FINISH	WATT	VOLT	FITTING
MAT025FLL	Matisse L floor	Bronze	2,8	230	-
MAT125FLL	Matisse L floor	Brushed nickel	2,8	230	-
MAT225FLL	Matisse L floor	Chrome	2,8	230	-
MAT325FLL	Matisse L floor	Polished brass	2,8	230	-

Contact us for:
Customization & connectivity

Authentage Catalogus 2024 Authentage Katalogus 2024 Authentage Catalogue 2024 Authentage Katalog 2024 Authentage Verlichting Authentage Lighting Authentage éclairage Authentage Beleuchtung
Authentage Webshop Authentage Verlichting Authentage Armaturen Authentage Winkels Authentage Verkooppunten Authentage Verdelers Authentage Verdeelpunten Authentage België Authentage Nederland Authentage Vente en Ligne Authentage Boutique Vente en Ligne Authentage Luminaires Authentage éclairage
Authentage Revendeurs Authentage Points de vente Authentage Magasins Authentage Boutiques Authentage Points de distribution Authentage France Authentage Lighting Authentage Retailers Authentage Dealers Authentage Distributors Authentage Points of sale Authentage Resellers Authentage England
Authentage Beleuchtung Authent Beleuchtung Authentage Leuchten Authentage Händler Authentage Shops Authentage Verkaufsstellen Authentage Vertriebspartner Authentage Deutschland Authentage E-shop Authentage Geschäfte Authentage Vertriebsstellen

www.Bcosy.be - Waarschoot - België - Belgique - Belgium - Belgien tel 0032 (0) 9 378 24 30 Mail: info@bcosy.be

MACRO

FLOOR

IP 20

For warmer light, add Kelvin Killer® - see p 474.
Lamps not included, consult light source guide for our advice.
Lamp includes a floor slide dimmer.



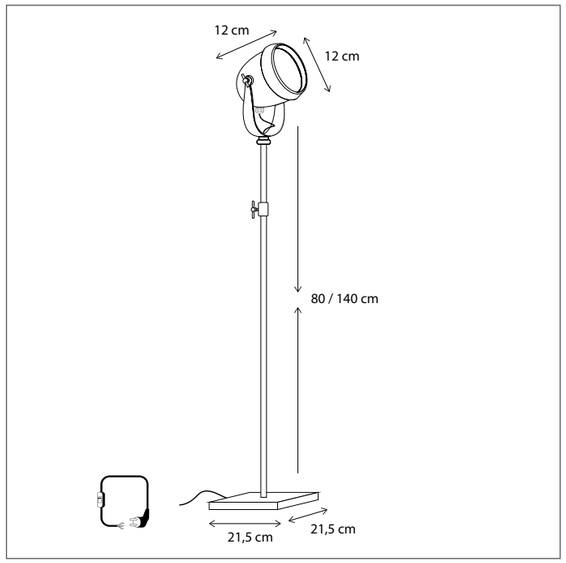

CODE	TYPE	FINISH	WATT	VOLT	FITTING
MAC001FLI	Macro floor	Bronze	12	230	G53
MAC101FLI	Macro floor	Brushed nickel	12	230	G53
MAC201FLI	Macro floor	Chrome	12	230	G53

SCAN & DISCOVER
OUR PATENTED KELVIN KILLER®

Contact us for:
Customization & connectivity

TUBELUM

FLOOR

IP 20

The light source is easy to move up and down, enabling you to change the light effect.
Inside is polished brass to create a warm glow.
Lamp includes a floor slide dimmer.
Lamps not included, consult light source guide for our advice.

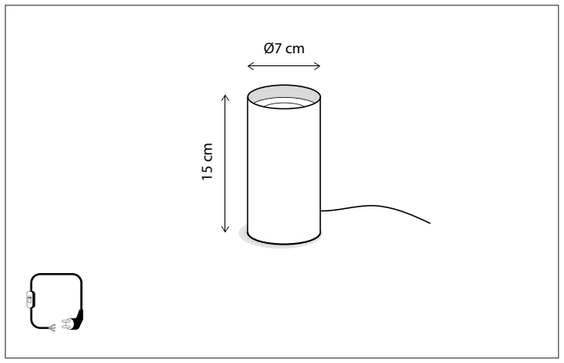



CODE	TYPE	FINISH	WATT	VOLT	FITTING
TBL001F15	Tubelum floor 15 cm	Bronze	8	230	GU10

Contact us for:
Customization & connectivity

Authentage Catalogus 2024 Authentage Katalogus 2024 Authentage Catalogue 2024 Authentage Katalog 2024 Authentage Verlichting Authentage Lighting Authentage éclairage Authentage Beleuchtung
Authentage Webshop Authentage Verlichting Authentage Armaturen Authentage Winkels Authentage Verkooppunten Authentage Verdelers Authentage Verdeelpunten Authentage België Authentage Nederland Authentage Vente en Ligne Authentage Boutique Vente en Ligne Authentage Luminaires Authentage éclairage
Authentage Revendeurs Authentage Points de vente Authentage Magasins Authentage Boutiques Authentage Points de distribution Authentage France Authentage Lighting Authentage Retailers Authentage Dealers Authentage Distributors Authentage Points of sale Authentage Resellers Authentage England
Authentage Beleuchtung Authent Beleuchtung Authentage Leuchten Authentage Händler Authentage Shops Authentage Verkaufsstellen Authentage Vertriebspartner Authentage Deutschland Authentage E-shop Authentage Geschäfte Authentage Vertriebsstellen

www.Bcosy.be - Waarschoot - België - Belgique - Belgium - Belgien tel 0032 (0) 9 378 24 30 Mail: info@bcosy.be

TUBELUM 2L

FLOOR

The light source is easy to move up and down, enabling you to change the light effect.
Inside is polished brass to create a warm glow.
Lamp includes a floor slide dimmer.
Lamps not included, consult light source guide for our advice.



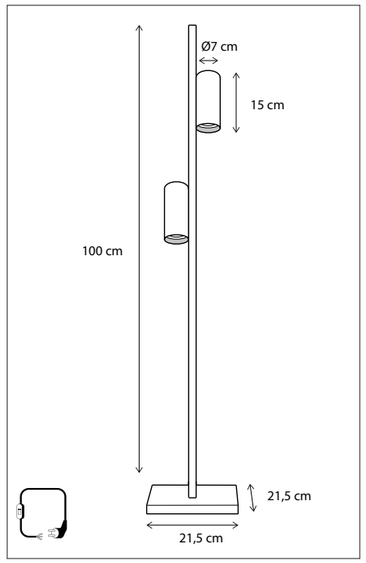

CODE	TYPE	FINISH	WATT	VOLT	FITTING
TBL002FLO	Tubelum floor 2L	Bronze	2 x 8	230	GU10

Contact us for:
Customization & connectivity

ELIGNE

FLOOR

Lamp includes a floor slide dimmer.
Dim-to-warm option available on request, see p493 accessories

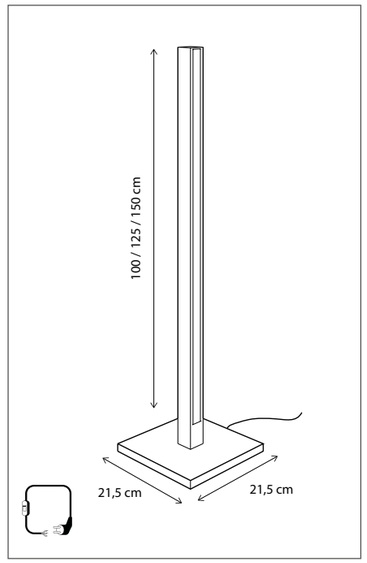



CODE	TYPE	FINISH	WATT	VOLT	FITTING
ELF002100	Eligne floor 100 cm	Bronze	25	230	-
ELF002125	Eligne floor 125 cm	Bronze	32	230	-
ELF002150	Eligne floor 150 cm	Bronze	39	230	-
ELF102100	Eligne floor 100 cm	Brushed nickel	25	230	-
ELF102125	Eligne floor 125 cm	Brushed nickel	32	230	-
ELF102150	Eligne floor 150 cm	Brushed nickel	39	230	-
ELF202100	Eligne floor 100 cm	Chrome	25	230	-
ELF202125	Eligne floor 125 cm	Chrome	32	230	-
ELF202150	Eligne floor 150 cm	Chrome	39	230	-

Contact us for:
Customization & connectivity

Authentage Catalogus 2024 Authentage Katalogus 2024 Authentage Catalogue 2024 Authentage Katalog 2024 Authentage Verlichting Authentage Lighting Authentage éclairage Authentage Beleuchtung
Authentage Webshop Authentage Verlichting Authentage Armaturen Authentage Winkels Authentage Verkooppunten Authentage Verdelers Authentage Verdeelpunten Authentage België Authentage Nederland Authentage Vente en Ligne Authentage Boutique Vente en Ligne Authentage Luminaires Authentage éclairage
Authentage Revendeurs Authentage Points de vente Authentage Magasins Authentage Boutiques Authentage Points de distribution Authentage France Authentage Lighting Authentage Retailers Authentage Dealers Authentage Distributors Authentage Points of sale Authentage Resellers Authentage England
Authentage Beleuchtung Authent Beleuchtung Authentage Leuchten Authentage Händler Authentage Shops Authentage Verkaufsstellen Authentage Vertriebspartner Authentage Deutschland Authentage E-shop Authentage Geschäfte Authentage Vertriebsstellen

www.Bcosy.be - Waarschoot - België - Belgique - Belgium - Belgien tel 0032 (0) 9 378 24 30 Mail: info@bcosy.be

LISIBLE POIRE

FLOOR



Available in 2 versions: GU10 (no driver required) or BA15d (driver required & included).
Lamps not included, consult light source guide for our advice.
Lamp includes a floor slide dimmer.

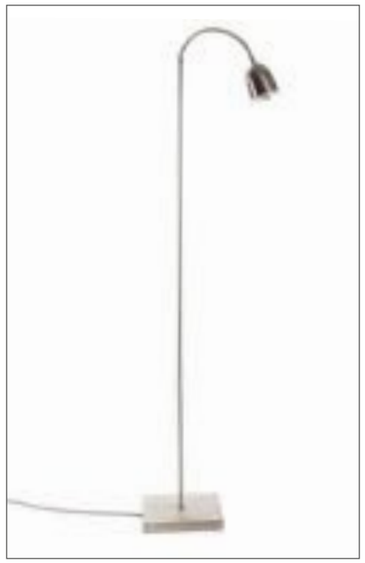

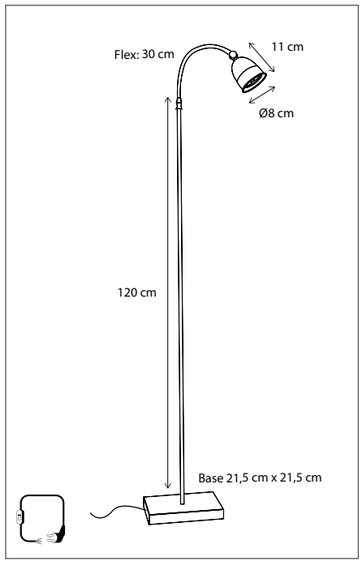

CODE	TYPE	FINISH	WATT	VOLT	FITTING
LCO0L1FLO	Lisible poire floor	Bronze	8	230	GU10
LCO1L1FLO	Lisible poire floor	Brushed nickel	8	230	GU10
LCO2L1FLO	Lisible poire floor	Chrome	8	230	GU10
LCO001FLO	Lisible poire floor	Bronze	8	230	BA15d
LCO101FLO	Lisible poire floor	Brushed nickel	8	230	BA15d
LCO201FLO	Lisible poire floor	Chrome	8	230	BA15d

Contact us for:
Customization & connectivity

LISIBLE FLEURE

FLOOR



Lamps not included, consult light source guide for our advice.
Lamp includes a floor slide dimmer.

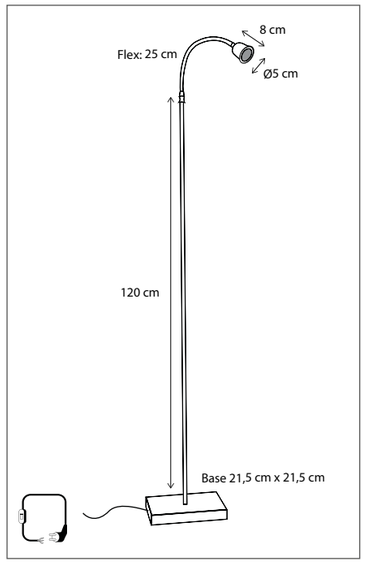

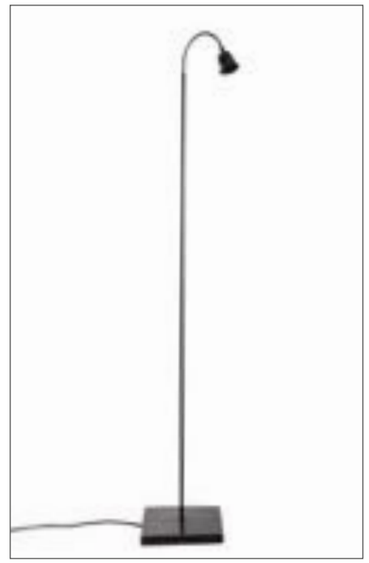

CODE	TYPE	FINISH	WATT	VOLT	FITTING
LFL0L1FLO	Lisible fleure floor	Bronze	5	230	G4
LFL1L1FLO	Lisible fleure floor	Brushed nickel	5	230	G4
LFL2L1FLO	Lisible fleure floor	Chrome	5	230	G4

Contact us for:
Customization & connectivity

INDOOR I FLOOR I LISIBLE

Authentage Catalogus 2024 Authentage Katalogus 2024 Authentage Catalogue 2024 Authentage Katalog 2024 Authentage Verlichting Authentage Lighting Authentage éclairage Authentage Beleuchtung
Authentage Webshop Authentage Verlichting Authentage Armaturen Authentage Winkels Authentage Verkooppunten Authentage Verdelers Authentage Verdeelpunten Authentage België Authentage Nederland Authentage Vente en Ligne Authentage Boutique Vente en Ligne Authentage Luminaires Authentage éclairage
Authentage Revendeurs Authentage Points de vente Authentage Magasins Authentage Boutiques Authentage Points de distribution Authentage France Authentage Lighting Authentage Retailers Authentage Dealers Authentage Distributors Authentage Points of sale Authentage Resellers Authentage England
Authentage Beleuchtung Authent Beleuchtung Authentage Leuchten Authentage Händler Authentage Shops Authentage Verkaufsstellen Authentage Vertriebspartner Authentage Deutschland Authentage E-shop Authentage Geschäfte Authentage Vertriebsstellen

www.Bcosy.be - Waarschoot - België - Belgique - Belgium - Belgien tel 0032 (0) 9 378 24 30 Mail: info@bcosy.be

LISIBLE FLEURE TWIN

FLOOR



Lamp includes a floor slide dimmer.
Lamps not included, consult light source guide for our advice.



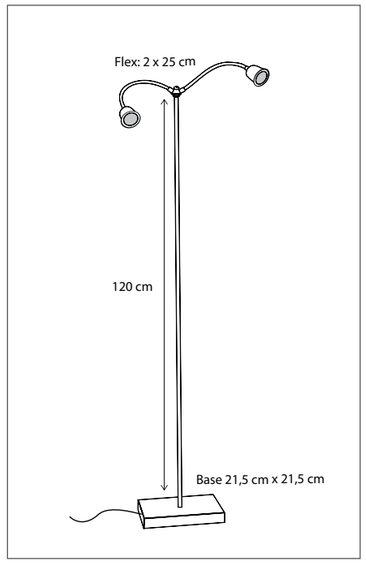

CODE	TYPE	FINISH	WATT	VOLT	FITTING
LFT0L1FLO	Lisible fleure twin floor	Bronze	2 x 5	230	G4
LFT1L1FLO	Lisible fleure twin floor	Brushed nickel	2 x 5	230	G4
LFT2L1FLO	Lisible fleure twin floor	Chrome	2 x 5	230	G4

Contact us for:
Customization & connectivity

LIT

FLOOR



Lamp includes a floor slide dimmer.
Lamps not included, consult light source guide for our advice.

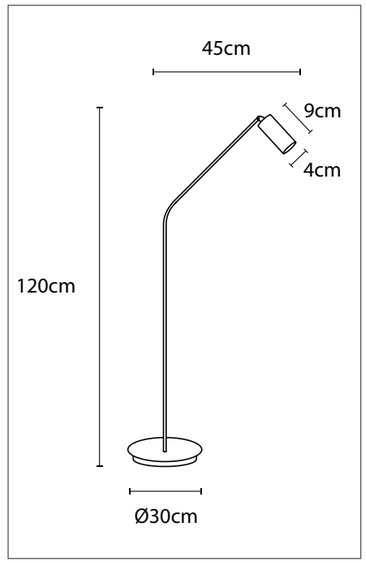

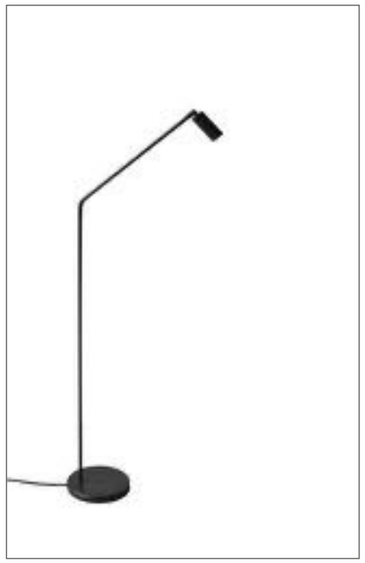

CODE	TYPE	FINISH	WATT	VOLT	FITTING
LIT001FLO	Lit floorlamp 120cm	Bronze	5	230	G4

Contact us for:
Customization & connectivity

Authentage Catalogus 2024 Authentage Katalogus 2024 Authentage Catalogue 2024 Authentage Katalog 2024 Authentage Verlichting Authentage Lighting Authentage éclairage Authentage Beleuchtung
Authentage Webshop Authentage Verlichting Authentage Armaturen Authentage Winkels Authentage Verkooppunten Authentage Verdelers Authentage Verdeelpunten Authentage België Authentage Nederland Authentage Vente en Ligne Authentage Boutique Vente en Ligne Authentage Luminaires Authentage éclairage
Authentage Revendeurs Authentage Points de vente Authentage Magasins Authentage Boutiques Authentage Points de distribution Authentage France Authentage Lighting Authentage Retailers Authentage Dealers Authentage Distributors Authentage Points of sale Authentage Resellers Authentage England
Authentage Beleuchtung Authent Beleuchtung Authentage Leuchten Authentage Händler Authentage Shops Authentage Verkaufsstellen Authentage Vertriebspartner Authentage Deutschland Authentage E-shop Authentage Geschäfte Authentage Vertriebsstellen

www.Bcosy.be - Waarschoot - België - Belgique - Belgium - Belgien tel 0032 (0) 9 378 24 30 Mail: info@bcosy.be

Create your own

BELLEFEU® 340

BELLEFEU® FIREPLACE 344

INDOOR



CATALOGUE I INDOOR I CREATE YOUR OWN

Authentage Catalogus 2024 Authentage Katalogus 2024 Authentage Catalogue 2024 Authentage Katalog 2024 Authentage Verlichting Authentage Lighting Authentage éclairage Authentage Beleuchtung
Authentage Webshop Authentage Verlichting Authentage Armaturen Authentage Winkels Authentage Verkooppunten Authentage Verdelers Authentage Verdeelpunten Authentage België Authentage Nederland Authentage Vente en Ligne Authentage Boutique Vente en Ligne Authentage Luminaires Authentage éclairage
Authentage Revendeurs Authentage Points de vente Authentage Magasins Authentage Boutiques Authentage Points de distribution Authentage France Authentage Lighting Authentage Retailers Authentage Dealers Authentage Distributors Authentage Points of sale Authentage Resellers Authentage England
Authentage Beleuchtung Authent Beleuchtung Authentage Leuchten Authentage Händler Authentage Shops Authentage Verkaufsstellen Authentage Vertriebspartner Authentage Deutschland Authentage E-shop Authentage Geschäfte Authentage Vertriebsstellen

www.Bcosy.be - Waarschoot - België - Belgique - Belgium - Belgien tel 0032 (0) 9 378 24 30 Mail: info@bcosy.be

STEP 1: Start with the starter kit that includes the module that creates the candle effect and a push dimmer. Note that 1 starter kit can serve up to 18 candles.

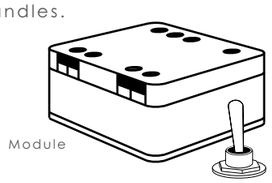

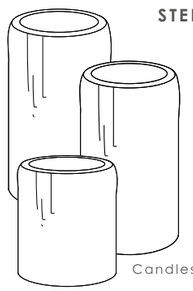

STEP 2: Choose the number of candles and the desired heights, diameters, and finishes. Available finishes include alabaster, glass, white wax and linnen wax.

STEP3: Each candle is 2.4W. Multiply 2.4 x number of candles. You need this result to choose the driver. A driver converts 230V to 24V. Note: the wattage of the driver should always be higher than the wattage of the number of candles. You can choose the desired driver on page 485.

Example: 2.4W x 10 candles= 24W -> TOEDR2430= 30W

#CANDLES	WATTAGE	DRIVER
1-4	12	TOEDR2412
4-8	20	TOEDR2420
8-12	30	TOEDR2430
12-18	60	TOEDR2460

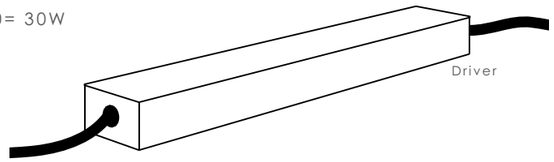

STEP4: Optional: LED diffusers & screw mounting units. LED diffusers (1 item/candle) mask the LED technology and are useful for candles placed on a table or close to the ground. Screw mounting units (1 unit/candle) can be added to fix the candles to a surface.

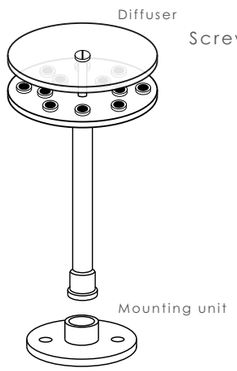

Control systems: prefer dimming via a switch on the wall or via home automation? Contact us for the various options.

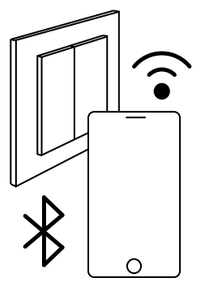

BELLEFEU®

CREATE YOUR OWN

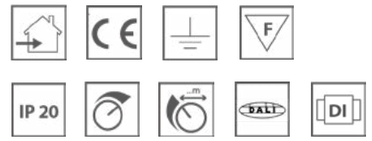

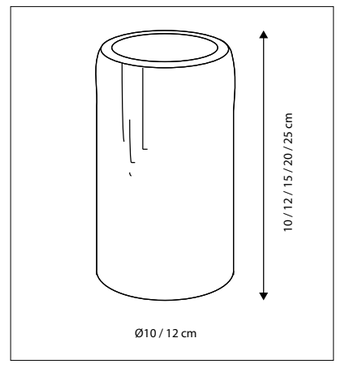





CODE	TYPE	FINISH	WATT	VOLT	FITTING
STEP 1					
COB001STA	Bellefeu starter unit + toggle dimmer (for max 18 led units)	-	-	24	-
STEP 2					
COB609LS2	Led unit + Candle wax H9cm - Ø10 cm	Linnen	2,4	24	-
COB612LS2	Led unit + Candle wax H12cm - Ø10 cm	Linnen	2,4	24	-
COB615LS2	Led unit + Candle wax H15cm - Ø10 cm	Linnen	2,4	24	-
COB620LS2	Led unit + Candle wax H20cm - Ø10 cm	Linnen	2,4	24	-
COB625LS2	Led unit + Candle wax H25cm - Ø10 cm	Linnen	2,4	24	-
COB609LS3	Led unit + Candle wax H9cm - Ø12 cm	Linnen	2,4	24	-
COB612LS3	Led unit + Candle wax H12cm - Ø12 cm	Linnen	2,4	24	-
COB615LS3	Led unit + Candle wax H15cm - Ø12 cm	Linnen	2,4	24	-
COB620LS3	Led unit + Candle wax H20cm - Ø12 cm	Linnen	2,4	24	-
COB625LS3	Led unit + Candle wax H25cm - Ø12 cm	Linnen	2,4	24	-

See next page for more models

Contact us for:

Customization & connectivity

SCAN & DISCOVER

REATE YOUR OWN BELLEFEU®

INDOOR I CREATE YOUR OWN

Authentage Catalogus 2024 Authentage Katalogus 2024 Authentage Catalogue 2024 Authentage Katalog 2024 Authentage Verlichting Authentage Lighting Authentage éclairage Authentage Beleuchtung
Authentage Webshop Authentage Verlichting Authentage Armaturen Authentage Winkels Authentage Verkooppunten Authentage Verdelers Authentage Verdeelpunten Authentage België Authentage Nederland Authentage Vente en Ligne Authentage Boutique Vente en Ligne Authentage Luminaires Authentage éclairage
Authentage Revendeurs Authentage Points de vente Authentage Magasins Authentage Boutiques Authentage Points de distribution Authentage France Authentage Lighting Authentage Retailers Authentage Dealers Authentage Distributors Authentage Points of sale Authentage Resellers Authentage England
Authentage Beleuchtung Authent Beleuchtung Authentage Leuchten Authentage Händler Authentage Shops Authentage Verkaufsstellen Authentage Vertriebspartner Authentage Deutschland Authentage E-shop Authentage Geschäfte Authentage Vertriebsstellen

www.Bcosy.be - Waarschoot - België - Belgique - Belgium - Belgien tel 0032 (0) 9 378 24 30 Mail: info@bcosy.be

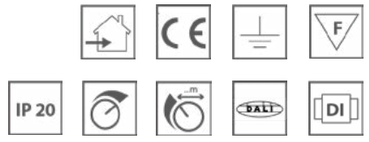

BELLEFEU®

CREATE YOUR OWN

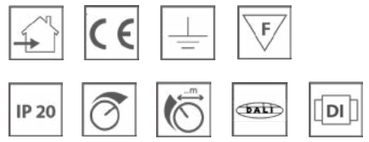

CODE	TYPE	FINISH	WATT	VOLT	FITTING
COB509LS2	Led unit + Candle wax H9cm - Ø10 cm	White	2,4	24	-
COB512LS2	Led unit + Candle wax H12cm - Ø10 cm	White	2,4	24	-
COB515LS2	Led unit + Candle wax H15cm - Ø10 cm	White	2,4	24	-
COB520LS2	Led unit + Candle wax H20cm - Ø10 cm	White	2,4	24	-
COB525LS2	Led unit + Candle wax H25cm - Ø10 cm	White	2,4	24	-
COB509LS3	Led unit + Candle wax H9cm - Ø12 cm	White	2,4	24	-
COB512LS3	Led unit + Candle wax H12cm - Ø12 cm	White	2,4	24	-
COB515LS3	Led unit + Candle wax H15cm - Ø12 cm	White	2,4	24	-
COB520LS3	Led unit + Candle wax H20cm - Ø12 cm	White	2,4	24	-
COB525LS3	Led unit + Candle wax H25cm - Ø12 cm	White	2,4	24	-
COB709LS2	Led unit + Candle alabaster H9cm - Ø10 cm	Alabaster	2,4	24	-
COB712LS2	Led unit + Candle alabaster H12cm - Ø10 cm	Alabaster	2,4	24	-
COB715LS2	Led unit + Candle alabaster H15cm - Ø10 cm	Alabaster	2,4	24	-
COB720LS2	Led unit + Candle alabaster H20cm - Ø10 cm	Alabaster	2,4	24	-
COB725LS3	Led unit + Candle alabaster H25cm - Ø12 cm	Alabaster	2,4	24	-

See next page for more models

CODE	TYPE	FINISH	WATT	VOLT	FITTING
COB809LS2	Led unit + Candle glass H9cm - Ø10 cm	Glass	2,4	24	-
COB812LS2	Led unit + Candle glass H12cm - Ø10 cm	Glass	2,4	24	-
COB815LS2	Led unit + Candle glass H15cm - Ø10 cm	Glass	2,4	24	-
COB820LS2	Led unit + Candle glass H20cm - Ø10 cm	Glass	2,4	24	-
COB809LS3	Led unit + Candle glass H9cm - Ø12 cm	Glass	2,4	24	-
COB812LS3	Led unit + Candle glass H12cm - Ø12 cm	Glass	2,4	24	-
COB815LS3	Led unit + Candle glass H15cm - Ø12 cm	Glass	2,4	24	-
COB820LS3	Led unit + Candle glass H20cm - Ø12 cm	Glass	2,4	24	-

STEP 4

COB001MOU	Screw mounting system for led units	Brass	-	-	-
COB001DIF	Create your own candle diffuser	Opal	-	-	-

SCAN & DISCOVER
CREATE YOUR OWN BELLEFEU®

Contact us for:
Customization & connectivity

Contact us for:
Customization & connectivity

Authentage Catalogus 2024 Authentage Katalogus 2024 Authentage Catalogue 2024 Authentage Katalog 2024 Authentage Verlichting Authentage Lighting Authentage éclairage Authentage Beleuchtung
Authentage Webshop Authentage Verlichting Authentage Armaturen Authentage Winkels Authentage Verkooppunten Authentage Verdelers Authentage Verdeelpunten Authentage België Authentage Nederland Authentage Vente en Ligne Authentage Boutique Vente en Ligne Authentage Luminaires Authentage éclairage
Authentage Revendeurs Authentage Points de vente Authentage Magasins Authentage Boutiques Authentage Points de distribution Authentage France Authentage Lighting Authentage Retailers Authentage Dealers Authentage Distributors Authentage Points of sale Authentage Resellers Authentage England
Authentage Beleuchtung Authent Beleuchtung Authentage Leuchten Authentage Händler Authentage Shops Authentage Verkaufsstellen Authentage Vertriebspartner Authentage Deutschland Authentage E-shop Authentage Geschäfte Authentage Vertriebsstellen

www.Bcosy.be - Waarschoot - België - Belgique - Belgium - Belgien tel 0032 (0) 9 378 24 30 Mail: info@bcosy.be

STEP 1: Start with the starter kit that includes the module that creates the candle effect and a push dimmer. Note that 1 starter kit can serve up to 18 candles.

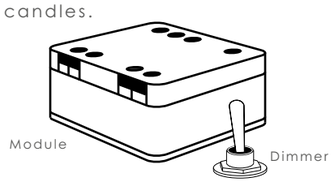

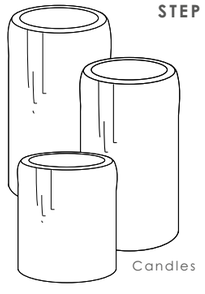

STEP 2: Choose the number of candles and the desired heights, diameters, and finishes. Available finishes include alabaster, glass, white wax and linnen wax.

STEP 3: Each candle is 2.4W. Multiply 2.4 x number of candles. You need this result to choose the driver. A driver converts 230V to 24V. Note: the wattage of the driver should always be higher than the wattage of the number of candles. You can choose the desired driver on page 487.

Example: 2.4W x 10 candles= 24W -> TOEDR2430= 30W

#CANDLES	WATTAGE	DRIVER
1-4	12	TOEDR2412
4-8	20	TOEDR2420
8-12	30	TOEDR2430
12-18	60	TOEDR2460

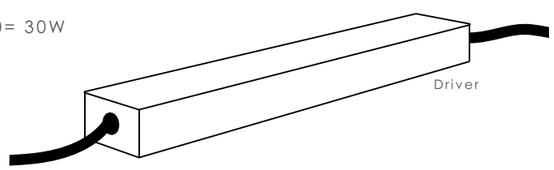

STEP 4: Optional: LED diffusers.
LED diffusers (1 item/candle) mask the LED technology and are useful for candles placed on a table or close to the ground.

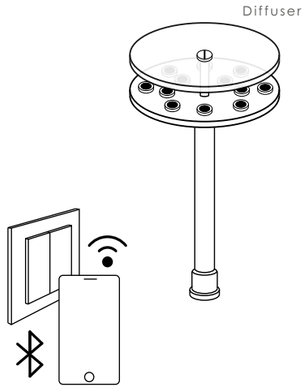

STEP 5: Measure the dimensions of your fireplace. W x D x H

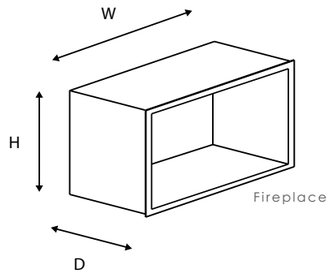

Control systems: prefer dimming via a switch on the wall or via home automation? Contact us for the various options.

Contact us for:

Customization & connectivity

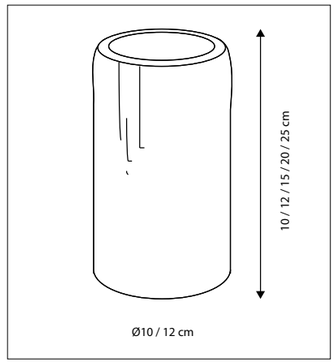





CODE	TYPE	FINISH	WATT	VOLT	FITTING
STEP 1					
COB001STA	Bellefeu starter unit + toggle dimmer (for max 18 led units)	-	-	24	-
STEP 2					
COB609LS2	Led unit + Candle wax H9cm - Ø10 cm	Linnen	2,4	24	-
COB612LS2	Led unit + Candle wax H12cm - Ø10 cm	Linnen	2,4	24	-
COB615LS2	Led unit + Candle wax H15cm - Ø10 cm	Linnen	2,4	24	-
COB620LS2	Led unit + Candle wax H20cm - Ø10 cm	Linnen	2,4	24	-
COB625LS2	Led unit + Candle wax H25cm - Ø10 cm	Linnen	2,4	24	-
COB609LS3	Led unit + Candle wax H9cm - Ø12 cm	Linnen	2,4	24	-
COB612LS3	Led unit + Candle wax H12cm - Ø12 cm	Linnen	2,4	24	-
COB615LS3	Led unit + Candle wax H15cm - Ø12 cm	Linnen	2,4	24	-
COB620LS3	Led unit + Candle wax H20cm - Ø12 cm	Linnen	2,4	24	-
COB625LS3	Led unit + Candle wax H25cm - Ø12 cm	Linnen	2,4	24	-

See next page for more models

Contact us for:

Customization & connectivity

SCAN & DISCOVER

REATE YOUR OWN BELLEFEU®

INDOOR I CREATE YOUR OWN

Authentage Catalogus 2024 Authentage Katalogus 2024 Authentage Catalogue 2024 Authentage Katalog 2024 Authentage Verlichting Authentage Lighting Authentage éclairage Authentage Beleuchtung
Authentage Webshop Authentage Verlichting Authentage Armaturen Authentage Winkels Authentage Verkooppunten Authentage Verdelers Authentage Verdeelpunten Authentage België Authentage Nederland Authentage Vente en Ligne Authentage Boutique Vente en Ligne Authentage Luminaires Authentage éclairage
Authentage Revendeurs Authentage Points de vente Authentage Magasins Authentage Boutiques Authentage Points de distribution Authentage France Authentage Lighting Authentage Retailers Authentage Dealers Authentage Distributors Authentage Points of sale Authentage Resellers Authentage England
Authentage Beleuchtung Authent Beleuchtung Authentage Leuchten Authentage Händler Authentage Shops Authentage Verkaufsstellen Authentage Vertriebspartner Authentage Deutschland Authentage E-shop Authentage Geschäfte Authentage Vertriebsstellen

www.Bcosy.be - Waarschoot - België - Belgique - Belgium - Belgien tel 0032 (0) 9 378 24 30 Mail: info@bcosy.be

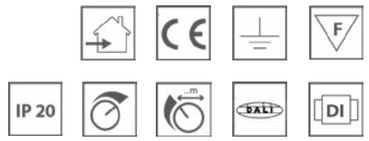

CODE	TYPE	FINISH	WATT	VOLT	FITTING
COB509LS2	Led unit + Candle wax H9cm - Ø10 cm	White	2,4	24	-
COB512LS2	Led unit + Candle wax H12cm - Ø10 cm	White	2,4	24	-
COB515LS2	Led unit + Candle wax H15cm - Ø10 cm	White	2,4	24	-
COB520LS2	Led unit + Candle wax H20cm - Ø10 cm	White	2,4	24	-
COB525LS2	Led unit + Candle wax H25cm - Ø10 cm	White	2,4	24	-
COB509LS3	Led unit + Candle wax H9cm - Ø12 cm	White	2,4	24	-
COB512LS3	Led unit + Candle wax H12cm - Ø12 cm	White	2,4	24	-
COB515LS3	Led unit + Candle wax H15cm - Ø12 cm	White	2,4	24	-
COB520LS3	Led unit + Candle wax H20cm - Ø12 cm	White	2,4	24	-
COB525LS3	Led unit + Candle wax H25cm - Ø12 cm	White	2,4	24	-
COB709LS2	Led unit + Candle alabaster H9cm - Ø10 cm	Alabaster	2,4	24	-
COB712LS2	Led unit + Candle alabaster H12cm - Ø10 cm	Alabaster	2,4	24	-
COB715LS2	Led unit + Candle alabaster H15cm - Ø10 cm	Alabaster	2,4	24	-
COB720LS2	Led unit + Candle alabaster H20cm - Ø10 cm	Alabaster	2,4	24	-
COB725LS3	Led unit + Candle alabaster H25cm - Ø12 cm	Alabaster	2,4	24	-

See next page for more models

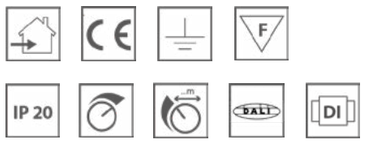

CODE	TYPE	FINISH	WATT	VOLT	FITTING
COB809LS2	Led unit + Candle glass H9cm - Ø10 cm	Glass	2,4	24	-
COB812LS2	Led unit + Candle glass H12cm - Ø10 cm	Glass	2,4	24	-
COB815LS2	Led unit + Candle glass H15cm - Ø10 cm	Glass	2,4	24	-
COB820LS2	Led unit + Candle glass H20cm - Ø10 cm	Glass	2,4	24	-
COB809LS3	Led unit + Candle glass H9cm - Ø12 cm	Glass	2,4	24	-
COB812LS3	Led unit + Candle glass H12cm - Ø12 cm	Glass	2,4	24	-
COB815LS3	Led unit + Candle glass H15cm - Ø12 cm	Glass	2,4	24	-
COB820LS3	Led unit + Candle glass H20cm - Ø12 cm	Glass	2,4	24	-

STEP 4

COB001DIF	Create your own candle diffuser	Opal	-	-	-

STEP 5

COB001BOX	Bellefeu fireplace box Bronze - W x D x H cm (dimensions to be specified)	Bronze	-	-	-

SCAN & DISCOVER
CREATE YOUR OWN BELLEFEU®

Contact us for:
Customization & connectivity

Contact us for:
Customization & connectivity

INDOOR I CREATE YOUR OWN

Authentage Catalogus 2024 Authentage Katalogus 2024 Authentage Catalogue 2024 Authentage Katalog 2024 Authentage Verlichting Authentage Lighting Authentage éclairage Authentage Beleuchtung
Authentage Webshop Authentage Verlichting Authentage Armaturen Authentage Winkels Authentage Verkooppunten Authentage Verdelers Authentage Verdeelpunten Authentage België Authentage Nederland Authentage Vente en Ligne Authentage Boutique Vente en Ligne Authentage Luminaires Authentage éclairage
Authentage Revendeurs Authentage Points de vente Authentage Magasins Authentage Boutiques Authentage Points de distribution Authentage France Authentage Lighting Authentage Retailers Authentage Dealers Authentage Distributors Authentage Points of sale Authentage Resellers Authentage England
Authentage Beleuchtung Authent Beleuchtung Authentage Leuchten Authentage Händler Authentage Shops Authentage Verkaufsstellen Authentage Vertriebspartner Authentage Deutschland Authentage E-shop Authentage Geschäfte Authentage Vertriebsstellen

www.Bcosy.be - Waarschoot - België - Belgique - Belgium - Belgien tel 0032 (0) 9 378 24 30 Mail: info@bcosy.be

Create your own

OUTDOOR



Contact us for:

Customization & connectivity

Authentage Catalogus 2024 Authentage Katalogus 2024 Authentage Catalogue 2024 Authentage Katalog 2024 Authentage Verlichting Authentage Lighting Authentage éclairage Authentage Beleuchtung
Authentage Webshop Authentage Verlichting Authentage Armaturen Authentage Winkels Authentage Verkooppunten Authentage Verdelers Authentage Verdeelpunten Authentage België Authentage Nederland Authentage Vente en Ligne Authentage Boutique Vente en Ligne Authentage Luminaires Authentage éclairage
Authentage Revendeurs Authentage Points de vente Authentage Magasins Authentage Boutiques Authentage Points de distribution Authentage France Authentage Lighting Authentage Retailers Authentage Dealers Authentage Distributors Authentage Points of sale Authentage Resellers Authentage England
Authentage Beleuchtung Authent Beleuchtung Authentage Leuchten Authentage Händler Authentage Shops Authentage Verkaufsstellen Authentage Vertriebspartner Authentage Deutschland Authentage E-shop Authentage Geschäfte Authentage Vertriebsstellen

www.Bcosy.be - Waarschoot - België - Belgique - Belgium - Belgien tel 0032 (0) 9 378 24 30 Mail: info@bcosy.be

STEP 1: Start with the starter kit that includes the module that creates the candle effect and a push dimmer. Note that 1 starter kit can serve up to 18 candles.

IP20: module indoor or in an enclosure only

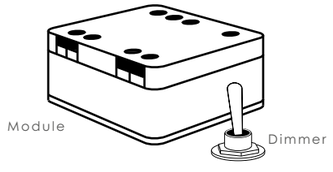

350

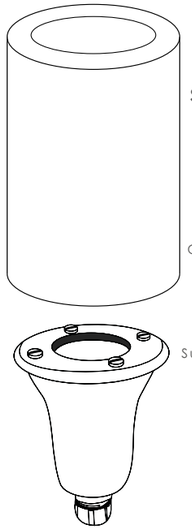

STEP 2: Choose the number of candles and the desired heights, diameters, and finishes. Available finishes include alabaster & glass.

STEP 3: Each candle is 2.4W. Multiply 2.4 x number of candles. You need this result to choose the driver. A driver converts 230V to 24V. Note: the wattage of the driver should always be higher than the wattage of the number of candles. You can choose the desired driver on page 487.

Example: 2.4W x 10 candles= 24W -> TOEDR2430= 30W

#CANDLES	WATTAGE	DRIVER
1-4	12	TOEDR2412
4-8	20	TOEDR2420
8-12	30	TOEDR2430
12-18	60	TOEDR2460

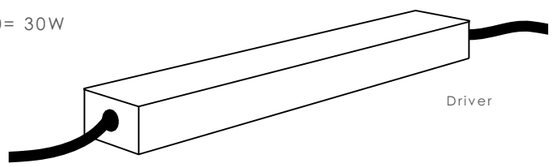

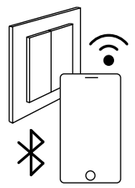

Control systems: prefer dimming via a switch on the wall or via home automation? Contact us for the various options.

SCAN & DISCOVER
CREATE YOUR OWN BELLEFEU®

Contact us for:
Customization & connectivity

BELLEFEU®
SUBTILE

CREATE YOUR OWN

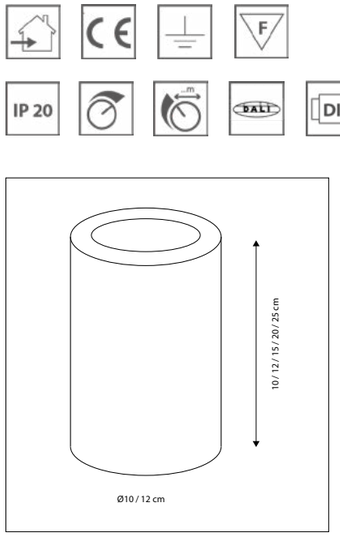





351

CODE	TYPE	FINISH	WATT	VOLT	FITTING
STEP 1					
SUB001STA	Bellefeu subtile starter set (for max 18 Subtile)	Bronze	2,4	24	-
STEP 2					
SUB809LS2	Bellefeu subtile + Candle glass H9cm - Ø10 cm	Bronze + Glass	2,4	24	-
SUB812LS2	Bellefeu subtile + Candle glass H12cm - Ø10 cm	Bronze + Glass	2,4	24	-
SUB815LS2	Bellefeu subtile + Candle glass H15cm - Ø10 cm	Bronze + Glass	2,4	24	-
SUB820LS2	Bellefeu subtile + Candle glass H20cm - Ø10 cm	Bronze + Glass	2,4	24	-
SUB809LS3	Bellefeu subtile + Candle glass H9cm - Ø12 cm	Bronze + Glass	2,4	24	-
SUB812LS3	Bellefeu subtile + Candle glass H12cm - Ø12 cm	Bronze + Glass	2,4	24	-
SUB815LS3	Bellefeu subtile + Candle glass H15cm - Ø12 cm	Bronze + Glass	2,4	24	-
SUB820LS3	Bellefeu subtile + Candle glass H20cm - Ø12 cm	Bronze + Glass	2,4	24	-
SUB709LS2	Bellefeu subtile + Candle alabaster H9cm - Ø10 cm	Bronze + Alabaster	2,4	24	-
SUB712LS2	Bellefeu subtile + Candle alabaster H12cm - Ø10 cm	Bronze + Alabaster	2,4	24	-
SUB715LS2	Bellefeu subtile + Candle alabaster H15cm - Ø10 cm	Bronze + Alabaster	2,4	24	-
SUB720LS2	Bellefeu subtile + Candle alabaster H20cm - Ø10 cm	Bronze + Alabaster	2,4	24	-
SUB725LS3	Bellefeu subtile + Candle alabaster H25cm - Ø12 cm	Bronze + Alabaster	2,4	24	-

Contact us for:
Customization & connectivity

CREATE YOUR OWN
OUTDOOR

Authentage Catalogus 2024 Authentage Katalogus 2024 Authentage Catalogue 2024 Authentage Katalog 2024 Authentage Verlichting Authentage Lighting Authentage éclairage Authentage Beleuchtung
Authentage Webshop Authentage Verlichting Authentage Armaturen Authentage Winkels Authentage Verkooppunten Authentage Verdelers Authentage Verdeelpunten Authentage België Authentage Nederland Authentage Vente en Ligne Authentage Boutique Vente en Ligne Authentage Luminaires Authentage éclairage
Authentage Revendeurs Authentage Points de vente Authentage Magasins Authentage Boutiques Authentage Points de distribution Authentage France Authentage Lighting Authentage Retailers Authentage Dealers Authentage Distributors Authentage Points of sale Authentage Resellers Authentage England
Authentage Beleuchtung Authent Beleuchtung Authentage Leuchten Authentage Händler Authentage Shops Authentage Verkaufsstellen Authentage Vertriebspartner Authentage Deutschland Authentage E-shop Authentage Geschäfte Authentage Vertriebsstellen

www.Bcosy.be - Waarschoot - België - Belgique - Belgium - Belgien tel 0032 (0) 9 378 24 30 Mail: info@bcosy.be

BELLEFEU® 354

BALUME 355

MICRO 356

VITRINE 365

VITRINE PETITE 371

NOBLESSE 374

GRACIEUZE 376

Q-BRI 384

ELEGANCE 385

ELEBASE 386

MACRO 388

ELIGNE 392

GRILLE 393

BEAUTIQUE 396

Wall

OUTDOOR



CATALOGUE I OUTDOOR I WALL

Authentage Catalogus 2024 Authentage Katalogus 2024 Authentage Catalogue 2024 Authentage Katalog 2024 Authentage Verlichting Authentage Lighting Authentage éclairage Authentage Beleuchtung
Authentage Webshop Authentage Verlichting Authentage Armaturen Authentage Winkels Authentage Verkooppunten Authentage Verdelers Authentage Verdeelpunten Authentage België Authentage Nederland Authentage Vente en Ligne Authentage Boutique Vente en Ligne Authentage Luminaires Authentage éclairage
Authentage Revendeurs Authentage Points de vente Authentage Magasins Authentage Boutiques Authentage Points de distribution Authentage France Authentage Lighting Authentage Retailers Authentage Dealers Authentage Distributors Authentage Points of sale Authentage Resellers Authentage England
Authentage Beleuchtung Authent Beleuchtung Authentage Leuchten Authentage Händler Authentage Shops Authentage Verkaufsstellen Authentage Vertriebspartner Authentage Deutschland Authentage E-shop Authentage Geschäfte Authentage Vertriebsstellen

www.Bcosy.be - Waarschoot - België - Belgique - Belgium - Belgien tel 0032 (0) 9 378 24 30 Mail: info@bcosy.be

BELLEFEU® VITRINE

WALL

IP 43 | DI

Integrated push dimmer for adjustable candle effect.

For control/connectivity options, see p494 accessories.



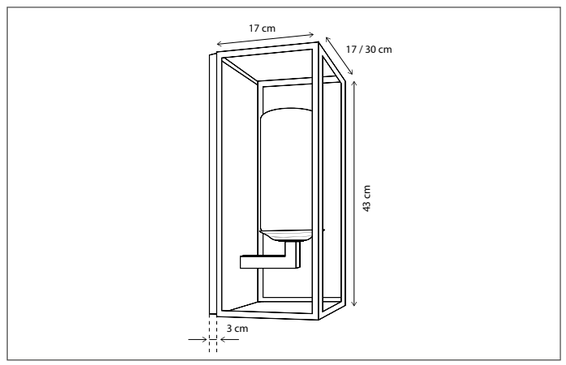

CODE	TYPE	FINISH	WATT	VOLT	FITTING
BVW001OUG	Bellefeu® vitrine wall - 1 candle glass	Bronze	2,4	230	-
BVW002OUG	Bellefeu® vitrine wall - 2 candles glass	Bronze	2 x 2,4	230	-
BVW101OUG	Bellefeu® vitrine wall - 1 candle glass	Brushed nickel	2,4	230	-
BVW102OUG	Bellefeu® vitrine wall - 2 candles glass	Brushed nickel	2 x 2,4	230	-
BVW201OUG	Bellefeu® vitrine wall - 1 candle glass	Chrome	2,4	230	-
BVW202OUG	Bellefeu® vitrine wall - 2 candles glass	Chrome	2 x 2,4	230	-
BAW001OUG	Bellefeu® vitrine wall - 1 candle alabaster	Bronze	2,4	230	-
BAW002OUG	Bellefeu® vitrine wall - 2 candles alabaster	Bronze	2 x 2,4	230	-
BAW101OUG	Bellefeu® vitrine wall - 1 candle alabaster	Brushed nickel	2,4	230	-
BAW102OUG	Bellefeu® vitrine wall - 2 candles alabaster	Brushed nickel	2 x 2,4	230	-
BAW201OUG	Bellefeu® vitrine wall - 1 candle alabaster	Chrome	2,4	230	-
BAW202OUG	Bellefeu® vitrine wall - 2 candles alabaster	Chrome	2 x 2,4	230	-

SCAN & DISCOVER
THE BELLEFEU EFFECT

Contact us for:
Customization & connectivity

BALUME

WALL

IP 43 | BALL

For warmer light, add Kelvin Killer® see p474.
For enhanced light dispersion or anti-glare effect, add frosted glass filter see p474.
Lamps not included, consult light source guide for our advice.

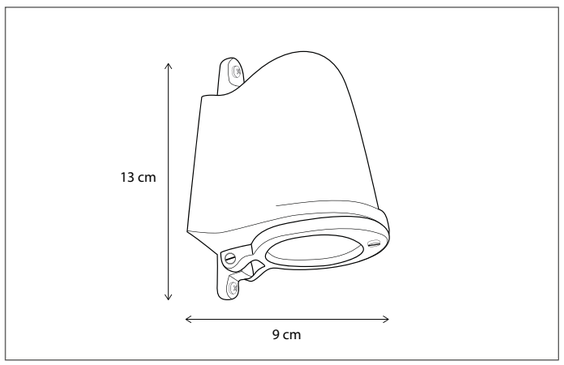



CODE	TYPE	FINISH	WATT	VOLT	FITTING
BAL001002	Balume wall	Bronze	8	230	GU10
BAL101002	Balume wall	Brushed nickel	8	230	GU10
BAL201002	Balume wall	Chrome	8	230	GU10
BAL301002	Balume wall	Polished brass	8	230	GU10

SCAN & DISCOVER
THE ADVANTAGE OF BRASS

Contact us for:
Customization & connectivity

Authentage Catalogus 2024 Authentage Katalogus 2024 Authentage Catalogue 2024 Authentage Katalog 2024 Authentage Verlichting Authentage Lighting Authentage éclairage Authentage Beleuchtung
Authentage Webshop Authentage Verlichting Authentage Armaturen Authentage Winkels Authentage Verkooppunten Authentage Verdelers Authentage Verdeelpunten Authentage België Authentage Nederland Authentage Vente en Ligne Authentage Boutique Vente en Ligne Authentage Luminaires Authentage éclairage
Authentage Revendeurs Authentage Points de vente Authentage Magasins Authentage Boutiques Authentage Points de distribution Authentage France Authentage Lighting Authentage Retailers Authentage Dealers Authentage Distributors Authentage Points of sale Authentage Resellers Authentage England
Authentage Beleuchtung Authent Beleuchtung Authentage Leuchten Authentage Händler Authentage Shops Authentage Verkaufsstellen Authentage Vertriebspartner Authentage Deutschland Authentage E-shop Authentage Geschäfte Authentage Vertriebsstellen

www.Bcosy.be - Waarschoot - België - Belgique - Belgium - Belgien tel 0032 (0) 9 378 24 30 Mail: info@bcosy.be

MICRO MOUNTED BASE

WALL

For warmer light, add Kelvin Killer® see p474.
For enhanced light dispersion or anti-glare effect, add frosted glass filter see p474.
Lamps not included, consult light source guide for our advice.



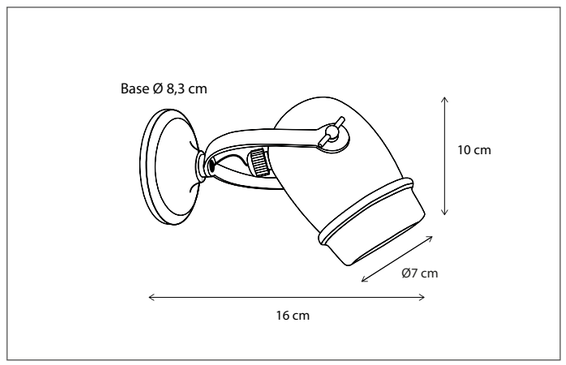

CODE	TYPE	FINISH	WATT	VOLT	FITTING
MIC001G83	Micro wall mounted base	Bronze	6	230	GU10
MIC101G83	Micro wall mounted base	Brushed nickel	6	230	GU10
MIC201G83	Micro wall mounted base	Chrome	6	230	GU10

Contact us for:
Customization & connectivity

MICRO ON ROUND BASE

WALL

For warmer light, add Kelvin Killer® see p474.
For enhanced light dispersion or anti-glare effect, add frosted glass filter see p474.
Lamps not included, consult light source guide for our advice.

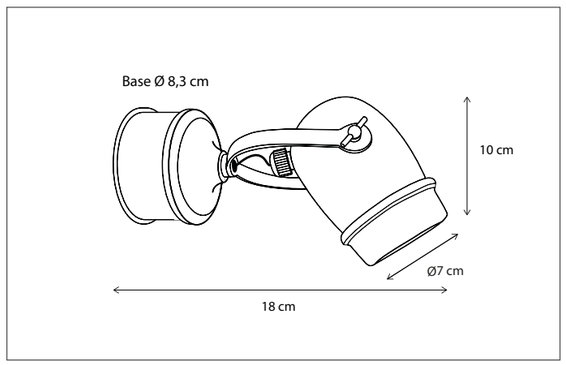



CODE	TYPE	FINISH	WATT	VOLT	FITTING
MIC001006	Micro wall on round base	Bronze	6	230	GU10
MIC101006	Micro wall on round base	Brushed nickel	6	230	GU10
MIC201006	Micro wall on round base	Chrome	6	230	GU10

Contact us for:
Customization & connectivity

SCAN & DISCOVER
THE ADVANTAGE OF BRASS

SCAN & DISCOVER
OUR PATENTED KELVIN KILLER®

WALL I MICRO
OUTDOOR

Authentage Catalogus 2024 Authentage Katalogus 2024 Authentage Catalogue 2024 Authentage Katalog 2024 Authentage Verlichting Authentage Lighting Authentage éclairage Authentage Beleuchtung
Authentage Webshop Authentage Verlichting Authentage Armaturen Authentage Winkels Authentage Verkooppunten Authentage Verdelers Authentage Verdeelpunten Authentage België Authentage Nederland Authentage Vente en Ligne Authentage Boutique Vente en Ligne Authentage Luminaires Authentage éclairage
Authentage Revendeurs Authentage Points de vente Authentage Magasins Authentage Boutiques Authentage Points de distribution Authentage France Authentage Lighting Authentage Retailers Authentage Dealers Authentage Distributors Authentage Points of sale Authentage Resellers Authentage England
Authentage Beleuchtung Authent Beleuchtung Authentage Leuchten Authentage Händler Authentage Shops Authentage Verkaufsstellen Authentage Vertriebspartner Authentage Deutschland Authentage E-shop Authentage Geschäfte Authentage Vertriebsstellen

www.Bcosy.be - Waarschoot - België - Belgique - Belgium - Belgien tel 0032 (0) 9 378 24 30 Mail: info@bcosy.be

MICRO UP & DOWN MOUNTED BASE

WALL

For warmer light, add Kelvin Killer® see p474.
For enhanced light dispersion or anti-glare effect, add frosted glass filter see p474.
Lamps not included, consult light source guide for our advice.



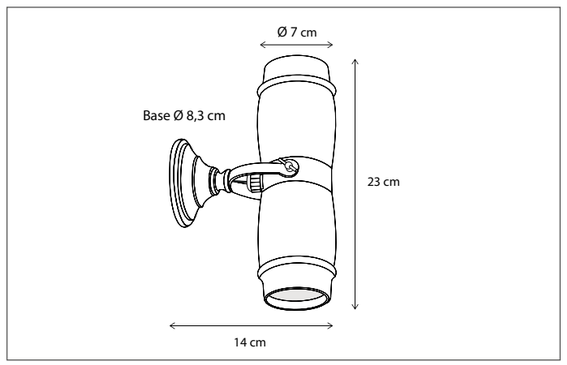

CODE	TYPE	FINISH	WATT	VOLT	FITTING
MIC002001	Micro up & down mounted base	Bronze	2 x 6	230	GU10
MIC102001	Micro up & down mounted base	Brushed nickel	2 x 6	230	GU10
MIC202001	Micro up & down mounted base	Chrome	2 x 6	230	GU10

SCAN & DISCOVER
THE ADVANTAGE OF BRASS

Contact us for:
Customization & connectivity

MICRO UP & DOWN ON ROUND BASE

WALL

For warmer light, add Kelvin Killer® see p474.
For enhanced light dispersion or anti-glare effect, add frosted glass filter see p474.
Lamps not included, consult light source guide for our advice.

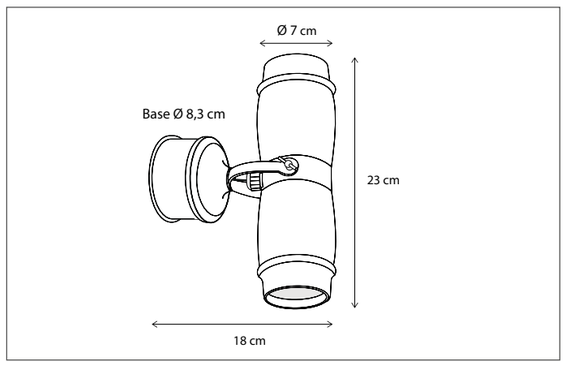



CODE	TYPE	FINISH	WATT	VOLT	FITTING
MIC002006	Micro up & down on round base	Bronze	2 x 6	230	GU10
MIC102006	Micro up & down on round base	Brushed nickel	2 x 6	230	GU10
MIC202006	Micro up & down on round base	Chrome	2 x 6	230	GU10

Contact us for:
Customization & connectivity

SCAN & DISCOVER
OUR PATENTED KELVIN KILLER®

Authentage Catalogus 2024 Authentage Katalogus 2024 Authentage Catalogue 2024 Authentage Katalog 2024 Authentage Verlichting Authentage Lighting Authentage éclairage Authentage Beleuchtung
Authentage Webshop Authentage Verlichting Authentage Armaturen Authentage Winkels Authentage Verkooppunten Authentage Verdelers Authentage Verdeelpunten Authentage België Authentage Nederland Authentage Vente en Ligne Authentage Boutique Vente en Ligne Authentage Luminaires Authentage éclairage
Authentage Revendeurs Authentage Points de vente Authentage Magasins Authentage Boutiques Authentage Points de distribution Authentage France Authentage Lighting Authentage Retailers Authentage Dealers Authentage Distributors Authentage Points of sale Authentage Resellers Authentage England
Authentage Beleuchtung Authent Beleuchtung Authentage Leuchten Authentage Händler Authentage Shops Authentage Verkaufsstellen Authentage Vertriebspartner Authentage Deutschland Authentage E-shop Authentage Geschäfte Authentage Vertriebsstellen

www.Bcosy.be - Waarschoot - België - Belgique - Belgium - Belgien tel 0032 (0) 9 378 24 30 Mail: info@bcosy.be

MICRO ON PROFILE

WALL



For warmer light, add Kelvin Killer® see p474.
For enhanced light dispersion or anti-glare effect, add frosted glass filter see p474.
Lamps not included, consult light source guide for our advice.



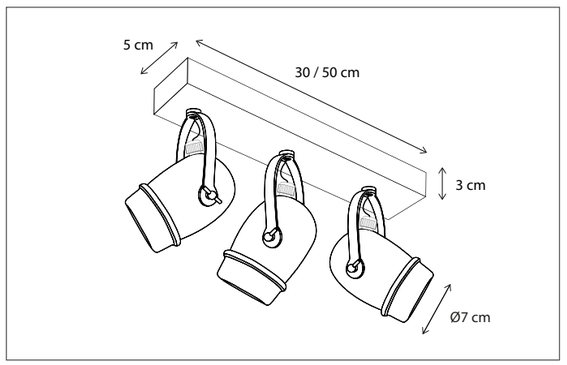

CODE	TYPE	FINISH	WATT	VOLT	FITTING
MIC002B03	Micro on profile 30 cm - 2L	Bronze	2 x 6	230	GU10
MIC003B05	Micro on profile 50 cm - 3L	Bronze	3 x 6	230	GU10
MIC102B03	Micro on profile 30 cm - 2L	Brushed nickel	2 x 6	230	GU10
MIC103B05	Micro on profile 50 cm - 3L	Brushed nickel	3 x 6	230	GU10
MIC202B03	Micro on profile 30 cm - 2L	Chrome	2 x 6	230	GU10
MIC203B05	Micro on profile 50 cm - 3L	Chrome	3 x 6	230	GU10

SCAN & DISCOVER
THE ADVANTAGE OF BRASS

Contact us for:
Customization & connectivity

MICRO PUBLICITY MOUNTED BASE

WALL

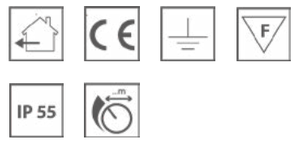

For warmer light, add Kelvin Killer® see p474.
For enhanced light dispersion or anti-glare effect, add frosted glass filter see p474.
Lamps not included, consult light source guide for our advice.

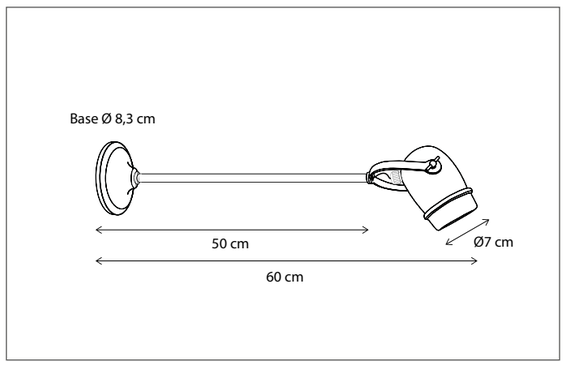

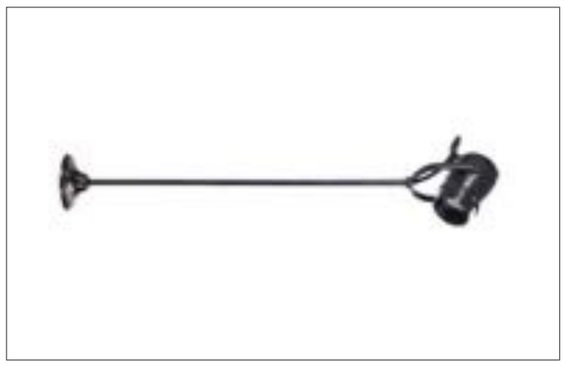

CODE	TYPE	FINISH	WATT	VOLT	FITTING
MIC001W50	Micro publicity tige	Bronze	6	230	GU10
MIC101W50	Micro publicity tige	Brushed nickel	6	230	GU10
MIC201W50	Micro publicity tige	Chrome	6	230	GU10

Contact us for:
Customization & connectivity

SCAN & DISCOVER
OUR PATENTED KELVIN KILLER®

Authentage Catalogus 2024 Authentage Katalogus 2024 Authentage Catalogue 2024 Authentage Katalog 2024 Authentage Verlichting Authentage Lighting Authentage éclairage Authentage Beleuchtung
Authentage Webshop Authentage Verlichting Authentage Armaturen Authentage Winkels Authentage Verkooppunten Authentage Verdelers Authentage Verdeelpunten Authentage België Authentage Nederland Authentage Vente en Ligne Authentage Boutique Vente en Ligne Authentage Luminaires Authentage éclairage
Authentage Revendeurs Authentage Points de vente Authentage Magasins Authentage Boutiques Authentage Points de distribution Authentage France Authentage Lighting Authentage Retailers Authentage Dealers Authentage Distributors Authentage Points of sale Authentage Resellers Authentage England
Authentage Beleuchtung Authent Beleuchtung Authentage Leuchten Authentage Händler Authentage Shops Authentage Verkaufsstellen Authentage Vertriebspartner Authentage Deutschland Authentage E-shop Authentage Geschäfte Authentage Vertriebsstellen

www.Bcosy.be - Waarschoot - België - Belgique - Belgium - Belgien tel 0032 (0) 9 378 24 30 Mail: info@bcosy.be

MICRO PUBLICITY ELEGANCE

WALL

IP 55

For warmer light, add Kelvin Killer® see p474.
For enhanced light dispersion or anti-glare effect, add frosted glass filter see p474.
Lamps not included, consult light source guide for our advice.

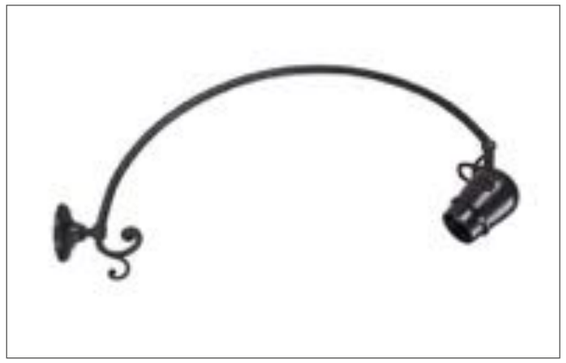

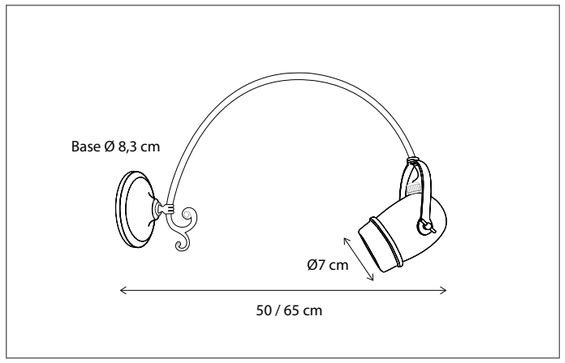

CODE	TYPE	FINISH	WATT	VOLT	FITTING
MIC001WEP	Micro publicity élégance petite	Bronze	6	230	GU10
MIC001WEG	Micro publicity élégance grande	Bronze	6	230	GU10
MIC101WEP	Micro publicity élégance petite	Brushed nickel	6	230	GU10
MIC101WEG	Micro publicity élégance grande	Brushed nickel	6	230	GU10
MIC201WEP	Micro publicity élégance petite	Chrome	6	230	GU10
MIC201WEG	Micro publicity élégance grande	Chrome	6	230	GU10

SCAN & DISCOVER
THE ADVANTAGE OF BRASS

Contact us for:
Customization & connectivity

VITRINE SMALL

WALL

IP 43

Lamps not included, consult light source guide for our advice.

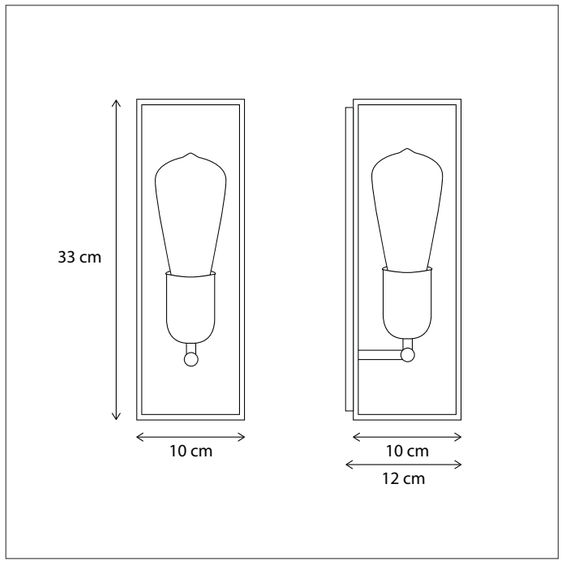



CODE	TYPE	FINISH	WATT	VOLT	FITTING
VIT001007	Vitrine wall small 1L	Bronze	15	230	E27
VIT101007	Vitrine wall small 1L	Brushed nickel	15	230	E27
VIT201007	Vitrine wall small 1L	Chrome	15	230	E27
VIT301007	Vitrine wall small 1L	Polished brass	15	230	E27

Contact us for:
Customization & connectivity

Authentage Catalogus 2024 Authentage Katalogus 2024 Authentage Catalogue 2024 Authentage Katalog 2024 Authentage Verlichting Authentage Lighting Authentage éclairage Authentage Beleuchtung
Authentage Webshop Authentage Verlichting Authentage Armaturen Authentage Winkels Authentage Verkooppunten Authentage Verdelers Authentage Verdeelpunten Authentage België Authentage Nederland Authentage Vente en Ligne Authentage Boutique Vente en Ligne Authentage Luminaires Authentage éclairage
Authentage Revendeurs Authentage Points de vente Authentage Magasins Authentage Boutiques Authentage Points de distribution Authentage France Authentage Lighting Authentage Retailers Authentage Dealers Authentage Distributors Authentage Points of sale Authentage Resellers Authentage England
Authentage Beleuchtung Authent Beleuchtung Authentage Leuchten Authentage Händler Authentage Shops Authentage Verkaufsstellen Authentage Vertriebspartner Authentage Deutschland Authentage E-shop Authentage Geschäfte Authentage Vertriebsstellen

www.Bcosy.be - Waarschoot - België - Belgique - Belgium - Belgien tel 0032 (0) 9 378 24 30 Mail: info@bcosy.be

VITRINE NORMAL

WALL

Lamps not included, consult light source guide for our advice.

366



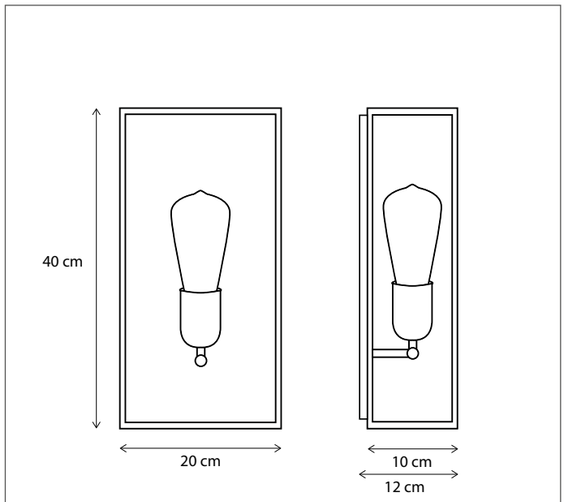

CODE	TYPE	FINISH	WATT	VOLT	FITTING
VIT001002	Vitrine wall normal 1L	Bronze	15	230	E27
VIT101002	Vitrine wall normal 1L	Brushed nickel	15	230	E27
VIT201002	Vitrine wall normal 1L	Chrome	15	230	E27
VIT301002	Vitrine wall normal 1L	Polished brass	15	230	E27

VITRINE LARGE

WALL

Lamps not included, consult light source guide for our advice.

367

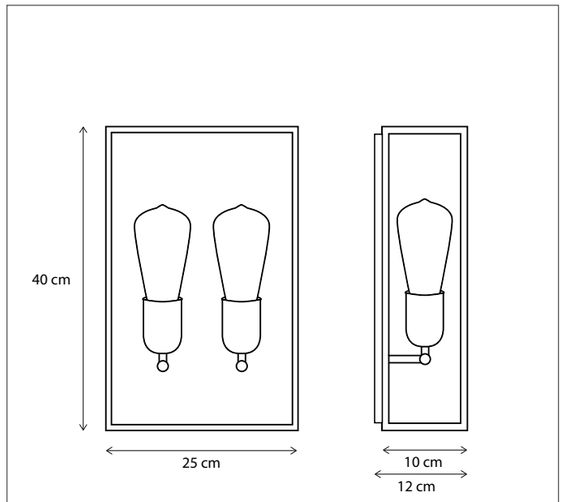



CODE	TYPE	FINISH	WATT	VOLT	FITTING
VIT002008	Vitrine wall large 2L	Bronze	2 x 15	230	E27
VIT102008	Vitrine wall large 2L	Brushed nickel	2 x 15	230	E27
VIT202008	Vitrine wall large 2L	Chrome	2 x 15	230	E27
VIT302008	Vitrine wall large 2L	Polished brass	2 x 15	230	E27

SCAN & DISCOVER
THE ADVANTAGE OF BRASS

Contact us for:
Customization & connectivity

Contact us for:
Customization & connectivity

WALL I VITRINE

OUTDOOR

Authentage Catalogus 2024 Authentage Katalogus 2024 Authentage Catalogue 2024 Authentage Katalog 2024 Authentage Verlichting Authentage Lighting Authentage éclairage Authentage Beleuchtung
Authentage Webshop Authentage Verlichting Authentage Armaturen Authentage Winkels Authentage Verkooppunten Authentage Verdelers Authentage Verdeelpunten Authentage België Authentage Nederland Authentage Vente en Ligne Authentage Boutique Vente en Ligne Authentage Luminaires Authentage éclairage
Authentage Revendeurs Authentage Points de vente Authentage Magasins Authentage Boutiques Authentage Points de distribution Authentage France Authentage Lighting Authentage Retailers Authentage Dealers Authentage Distributors Authentage Points of sale Authentage Resellers Authentage England
Authentage Beleuchtung Authent Beleuchtung Authentage Leuchten Authentage Händler Authentage Shops Authentage Verkaufsstellen Authentage Vertriebspartner Authentage Deutschland Authentage E-shop Authentage Geschäfte Authentage Vertriebsstellen

www.Bcosy.be - Waarschoot - België - Belgique - Belgium - Belgien tel 0032 (0) 9 378 24 30 Mail: info@bcosy.be

VITRINE CENTONZE

WALL

IP 43

Lamps not included, consult light source guide for our advice.



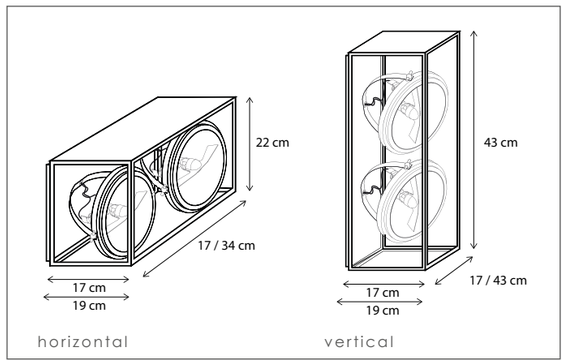

CODE	TYPE	FINISH	WATT	VOLT	FITTING
VIT001004	Vitrine wall centonze 1L horizontal 17 x 22 cm	Bronze	12	230	G53
VIT002004	Vitrine wall centonze 2L horizontal 34 x 22 cm	Bronze	2 x 12	230	G53
VIT002005	Vitrine wall centonze 2L vertical 17 x 43 cm	Bronze	2 x 12	230	G53
VIT004009	Vitrine wall centonze 4L vertical 43 x 43 cm	Bronze	4 x 12	230	G53
VIT102004	Vitrine wall centonze 1L horizontal 17 x 22 cm	Brushed nickel	12	230	G53
VIT101004	Vitrine wall centonze 2L horizontal 34 x 22 cm	Brushed nickel	2 x 12	230	G53
VIT102005	Vitrine wall centonze 2L vertical 17 x 43 cm	Brushed nickel	2 x 12	230	G53
VIT104009	Vitrine wall centonze 4L vertical 43 x 43 cm	Brushed nickel	4 x 12	230	G53
VIT201004	Vitrine wall centonze 1L horizontal 17 x 22 cm	Chrome	12	230	G53
VIT202004	Vitrine wall centonze 2L horizontal 34 x 22 cm	Chrome	2 x 12	230	G53
VIT202005	Vitrine wall centonze 2L vertical 17 x 43 cm	Chrome	2 x 12	230	G53
VIT204009	Vitrine wall centonze 4L vertical 43 x 43 cm	Chrome	4 x 12	230	G53

SCAN & DISCOVER
THE ADVANTAGE OF BRASS

Contact us for:
Customization & connectivity

VITRINE UP & DOWN

WALL

IP 43

Lamps not included, consult light source guide for our advice.

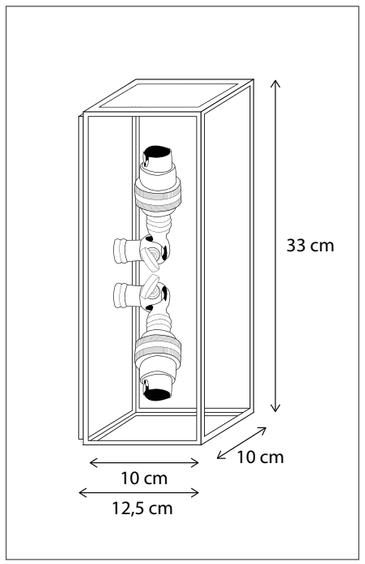



CODE	TYPE	FINISH	WATT	VOLT	FITTING
VIT002010	Vitrine up & down marron	Bronze	2 x 8	230	BA15d
VIT102010	Vitrine up & down marron	Brushed nickel	2 x 8	230	BA15d
VIT202010	Vitrine up & down marron	Chrome	2 x 8	230	BA15d

Contact us for:
Customization & connectivity

Authentage Catalogus 2024 Authentage Katalogus 2024 Authentage Catalogue 2024 Authentage Katalog 2024 Authentage Verlichting Authentage Lighting Authentage éclairage Authentage Beleuchtung
Authentage Webshop Authentage Verlichting Authentage Armaturen Authentage Winkels Authentage Verkooppunten Authentage Verdelers Authentage Verdeelpunten Authentage België Authentage Nederland Authentage Vente en Ligne Authentage Boutique Vente en Ligne Authentage Luminaires Authentage éclairage
Authentage Revendeurs Authentage Points de vente Authentage Magasins Authentage Boutiques Authentage Points de distribution Authentage France Authentage Lighting Authentage Retailers Authentage Dealers Authentage Distributors Authentage Points of sale Authentage Resellers Authentage England
Authentage Beleuchtung Authent Beleuchtung Authentage Leuchten Authentage Händler Authentage Shops Authentage Verkaufsstellen Authentage Vertriebspartner Authentage Deutschland Authentage E-shop Authentage Geschäfte Authentage Vertriebsstellen

www.Bcosy.be - Waarschoot - België - Belgique - Belgium - Belgien tel 0032 (0) 9 378 24 30 Mail: info@bcosy.be

VITRINE TORCH

WALL



Lamps not included, consult light source guide for our advice.



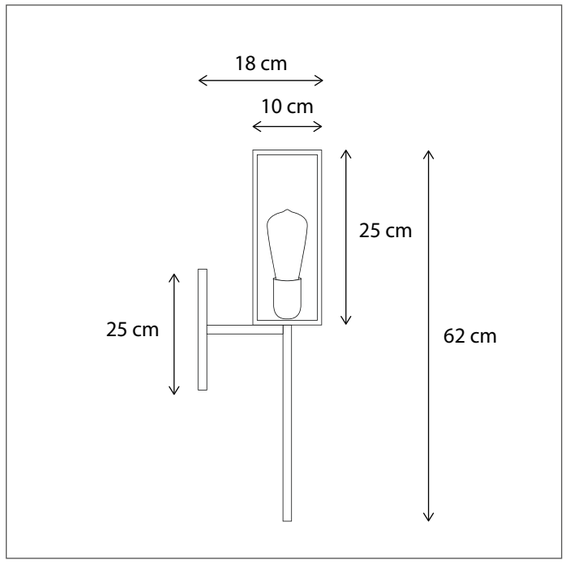

CODE	TYPE	FINISH	WATT	VOLT	FITTING
VIT001008	Vitrine wall torch	Bronze	15	230	E27
VIT101008	Vitrine wall torch	Brushed nickel	15	230	E27
VIT201008	Vitrine wall torch	Chrome	15	230	E27

VITRINE PETITE 1L

WALL

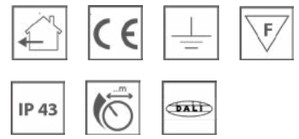

Lamps not included, consult light source guide for our advice.

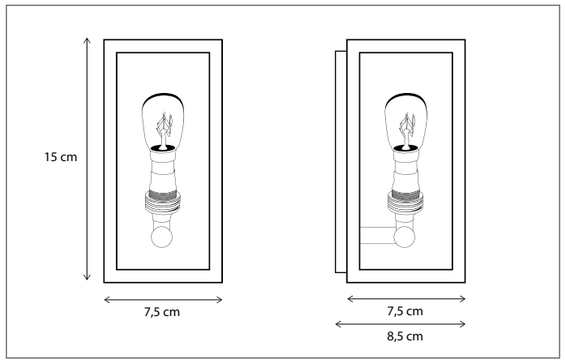



CODE	TYPE	FINISH	WATT	VOLT	FITTING
VIP001001	Vitrine petite wall 1L	Bronze	6	230	BA15d
VIP101001	Vitrine petite wall 1L	Brushed nickel	6	230	BA15d
VIP201001	Vitrine petite wall 1L	Chrome	6	230	BA15d

SCAN & DISCOVER
THE ADVANTAGE OF BRASS

Contact us for:
Customization & connectivity

Contact us for:
Customization & connectivity

Authentage Catalogus 2024 Authentage Katalogus 2024 Authentage Catalogue 2024 Authentage Katalog 2024 Authentage Verlichting Authentage Lighting Authentage éclairage Authentage Beleuchtung
Authentage Webshop Authentage Verlichting Authentage Armaturen Authentage Winkels Authentage Verkooppunten Authentage Verdelers Authentage Verdeelpunten Authentage België Authentage Nederland Authentage Vente en Ligne Authentage Boutique Vente en Ligne Authentage Luminaires Authentage éclairage
Authentage Revendeurs Authentage Points de vente Authentage Magasins Authentage Boutiques Authentage Points de distribution Authentage France Authentage Lighting Authentage Retailers Authentage Dealers Authentage Distributors Authentage Points of sale Authentage Resellers Authentage England
Authentage Beleuchtung Authent Beleuchtung Authentage Leuchten Authentage Händler Authentage Shops Authentage Verkaufsstellen Authentage Vertriebspartner Authentage Deutschland Authentage E-shop Authentage Geschäfte Authentage Vertriebsstellen

www.Bcosy.be - Waarschoot - België - Belgique - Belgium - Belgien tel 0032 (0) 9 378 24 30 Mail: info@bcosy.be

VITRINE PETITE 2L

WALL



Lamps not included, consult light source guide for our advice.

372



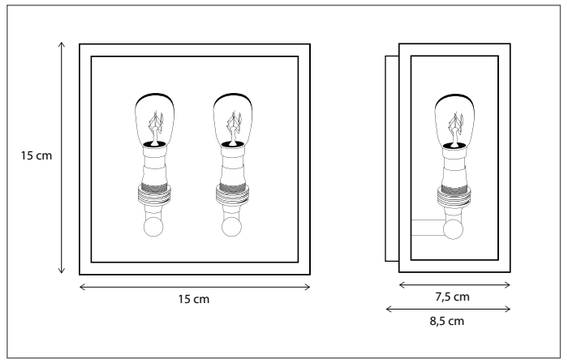

CODE	TYPE	FINISH	WATT	VOLT	FITTING
VIP002003	Vitrine petite wall 2L	Bronze	2 x 6	230	BA15d
VIP102003	Vitrine petite wall 2L	Brushed nickel	2 x 6	230	BA15d
VIP202003	Vitrine petite wall 2L	Chrome	2 x 6	230	BA15d

Contact us for:

Customization & connectivity

VITRINE PETITE TORCH

WALL

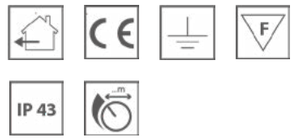

Lamps not included, consult light source guide for our advice.

373

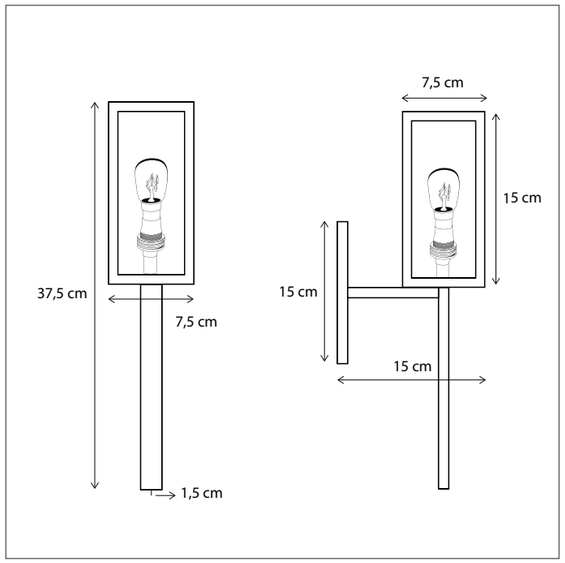



CODE	TYPE	FINISH	WATT	VOLT	FITTING
VIP001007	Vitrine petite torch	Bronze	6	230	BA15d
VIP101007	Vitrine petite torch	Brushed nickel	6	230	BA15d
VIP201007	Vitrine petite torch	Chrome	6	230	BA15d

Contact us for:

Customization & connectivity

WALL I VITRINE PETITE
OUTDOOR

Authentage Catalogus 2024 Authentage Katalogus 2024 Authentage Catalogue 2024 Authentage Katalog 2024 Authentage Verlichting Authentage Lighting Authentage éclairage Authentage Beleuchtung
Authentage Webshop Authentage Verlichting Authentage Armaturen Authentage Winkels Authentage Verkooppunten Authentage Verdelers Authentage Verdeelpunten Authentage België Authentage Nederland Authentage Vente en Ligne Authentage Boutique Vente en Ligne Authentage Luminaires Authentage éclairage
Authentage Revendeurs Authentage Points de vente Authentage Magasins Authentage Boutiques Authentage Points de distribution Authentage France Authentage Lighting Authentage Retailers Authentage Dealers Authentage Distributors Authentage Points of sale Authentage Resellers Authentage England
Authentage Beleuchtung Authent Beleuchtung Authentage Leuchten Authentage Händler Authentage Shops Authentage Verkaufsstellen Authentage Vertriebspartner Authentage Deutschland Authentage E-shop Authentage Geschäfte Authentage Vertriebsstellen

www.Bcosy.be - Waarschoot - België - Belgique - Belgium - Belgien tel 0032 (0) 9 378 24 30 Mail: info@bcosy.be

NOBLESSE BELLEFEU

WALL

Integrated push dimmer for adjustable candle effect.

For control/connectivity options, see p494 accessories.



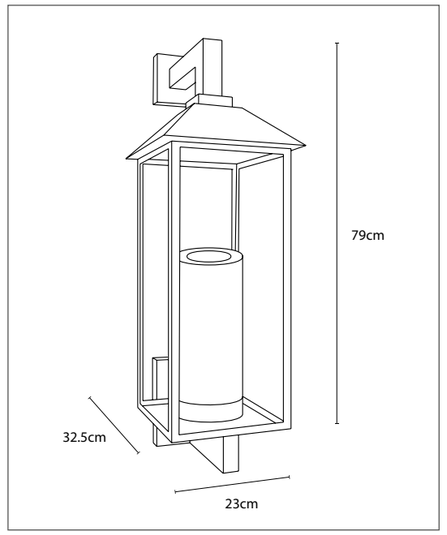

CODE	TYPE	FINISH	WATT	VOLT	FITTING
NBL0B1W50	Noblesse bellefeu wall - 1 candle alabaster	Bronze	2,4	230	-

SCAN & DISCOVER
THE BELLEFEU EFFECT

Contact us for:
Customization & connectivity

NOBLESSE E27

WALL

Lamps not included, consult light source guide for our advice.

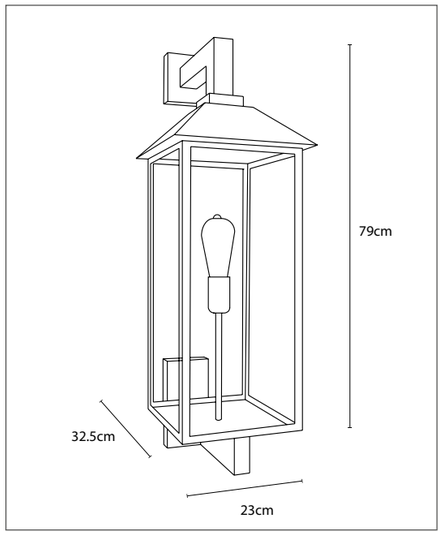



CODE	TYPE	FINISH	WATT	VOLT	FITTING
NBL001W50	Noblesse E27 wall	Bronze	15	230	E27

Contact us for:
Customization & connectivity

WALL I NOBLESSE
OUTDOOR

Authentage Catalogus 2024 Authentage Katalogus 2024 Authentage Catalogue 2024 Authentage Katalog 2024 Authentage Verlichting Authentage Lighting Authentage éclairage Authentage Beleuchtung
Authentage Webshop Authentage Verlichting Authentage Armaturen Authentage Winkels Authentage Verkooppunten Authentage Verdelers Authentage Verdeelpunten Authentage België Authentage Nederland Authentage Vente en Ligne Authentage Boutique Vente en Ligne Authentage Luminaires Authentage éclairage
Authentage Revendeurs Authentage Points de vente Authentage Magasins Authentage Boutiques Authentage Points de distribution Authentage France Authentage Lighting Authentage Retailers Authentage Dealers Authentage Distributors Authentage Points of sale Authentage Resellers Authentage England
Authentage Beleuchtung Authent Beleuchtung Authentage Leuchten Authentage Händler Authentage Shops Authentage Verkaufsstellen Authentage Vertriebspartner Authentage Deutschland Authentage E-shop Authentage Geschäfte Authentage Vertriebsstellen

www.Bcosy.be - Waarschoot - België - Belgique - Belgium - Belgien tel 0032 (0) 9 378 24 30 Mail: info@bcosy.be

GRACIEUZE ON BRACKET SMALL/NORMAL

WALL

An extra spot can be added in the ceiling of the normal variant (1L --> 2L).
Lamps not included, consult light source guide for our advice.
Bracket galvanised steel.



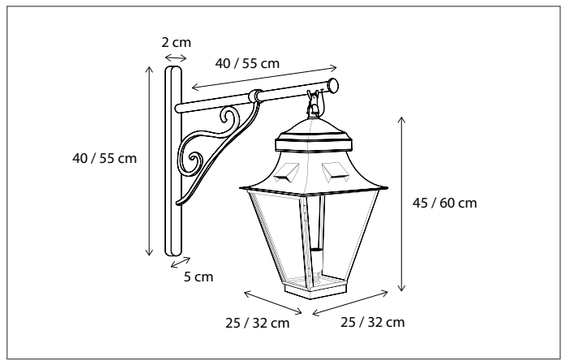

GRACIEUZE ON BRACKET GRAND

WALL

4 extra GU10 spots can be added in the ceiling of the grand variant (4L --> 8L).
Bracket galvanised steel.
Lamps not included, consult light source guide for our advice.

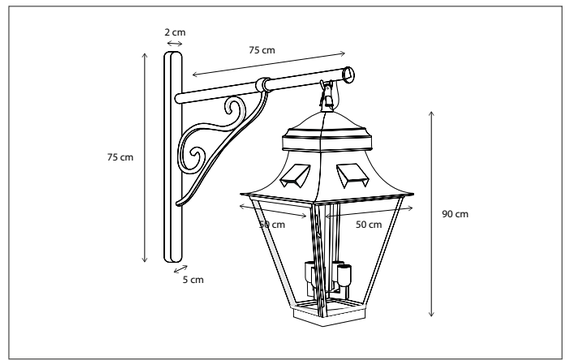



CODE	TYPE	FINISH	WATT	VOLT	FITTING
GRA001WB3	Gracieuze wall on bracket small 1L	Bronze	15	230	E27
GRA001WB5	Gracieuze wall on bracket normal 1L	Bronze	15	230	E27
GRA002WB5	Gracieuze wall on bracket normal 2L	Bronze	15 + 8	230	E27 + GU10

CODE	TYPE	FINISH	WATT	VOLT	FITTING
GRA004WB9	Gracieuze wall on bracket grand 4L	Bronze	4 x 15	230	E27
GRA008WB9	Gracieuze wall on bracket grand 8L	Bronze	4 x 15 + 4 x 8	230	E27 + GU10

SCAN & DISCOVER
THE ADVANTAGE OF BRASS

Contact us for:
Customization & connectivity

Contact us for:
Customization & connectivity

WALL I GRACIEUZE

OUTDOOR

Authentage Catalogus 2024 Authentage Katalogus 2024 Authentage Catalogue 2024 Authentage Katalog 2024 Authentage Verlichting Authentage Lighting Authentage éclairage Authentage Beleuchtung
Authentage Webshop Authentage Verlichting Authentage Armaturen Authentage Winkels Authentage Verkooppunten Authentage Verdelers Authentage Verdeelpunten Authentage België Authentage Nederland Authentage Vente en Ligne Authentage Boutique Vente en Ligne Authentage Luminaires Authentage éclairage
Authentage Revendeurs Authentage Points de vente Authentage Magasins Authentage Boutiques Authentage Points de distribution Authentage France Authentage Lighting Authentage Retailers Authentage Dealers Authentage Distributors Authentage Points of sale Authentage Resellers Authentage England
Authentage Beleuchtung Authent Beleuchtung Authentage Leuchten Authentage Händler Authentage Shops Authentage Verkaufsstellen Authentage Vertriebspartner Authentage Deutschland Authentage E-shop Authentage Geschäfte Authentage Vertriebsstellen

www.Bcosy.be - Waarschoot - België - Belgique - Belgium - Belgien tel 0032 (0) 9 378 24 30 Mail: info@bcosy.be

GRACIEUZE ON BRACKET UP

WALL

IP 43

An extra spot can be added in the ceiling of the normal variant (1L --> 2L).
Lamps not included, consult light source guide for our advice.



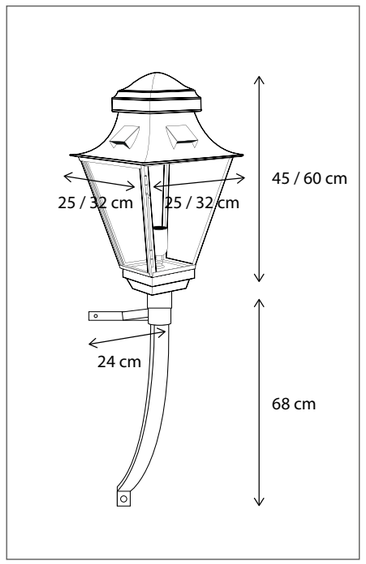

CODE	TYPE	FINISH	WATT	VOLT	FITTING
GRA001WU3	Gracieuze wall on bracket up small 1L	Bronze	15	230	E27
GRA001WU5	Gracieuze wall on bracket up normal 1L	Bronze	15	230	E27
GRA002WU5	Gracieuze wall on bracket up normal 2L	Bronze	15 + 8	230	E27 + GU10

GRACIEUZE WALL SMALL/NORMAL

WALL

IP 43

An extra spot can be added in the ceiling of the normal variant (1L --> 2L).
Lamps not included, consult light source guide for our advice.

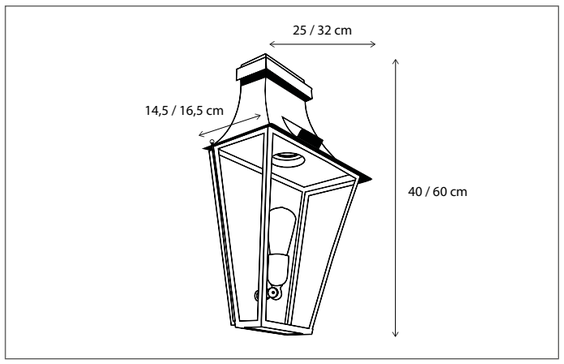



CODE	TYPE	FINISH	WATT	VOLT	FITTING
GRA001WA3	Gracieuze wall normal 1L	Bronze	15	230	E27
GRA001WAN	Gracieuze wall normal 1L	Bronze	15	230	E27
GRA002WAN	Gracieuze wall normal 2L	Bronze	15 + 8	230	E27 + GU10

SCAN & DISCOVER
THE ADVANTAGE OF BRASS

Contact us for:
Customization & connectivity

Contact us for:
Customization & connectivity

WALL I GRACIEUZE

OUTDOOR

Authentage Catalogus 2024 Authentage Katalogus 2024 Authentage Catalogue 2024 Authentage Katalog 2024 Authentage Verlichting Authentage Lighting Authentage éclairage Authentage Beleuchtung
Authentage Webshop Authentage Verlichting Authentage Armaturen Authentage Winkels Authentage Verkooppunten Authentage Verdelers Authentage Verdeelpunten Authentage België Authentage Nederland Authentage Vente en Ligne Authentage Boutique Vente en Ligne Authentage Luminaires Authentage éclairage
Authentage Revendeurs Authentage Points de vente Authentage Magasins Authentage Boutiques Authentage Points de distribution Authentage France Authentage Lighting Authentage Retailers Authentage Dealers Authentage Distributors Authentage Points of sale Authentage Resellers Authentage England
Authentage Beleuchtung Authent Beleuchtung Authentage Leuchten Authentage Händler Authentage Shops Authentage Verkaufsstellen Authentage Vertriebspartner Authentage Deutschland Authentage E-shop Authentage Geschäfte Authentage Vertriebsstellen

www.Bcosy.be - Waarschoot - België - Belgique - Belgium - Belgien tel 0032 (0) 9 378 24 30 Mail: info@bcosy.be

GRACIEUZE WALL GRAND

WALL

IP 43

2 extra spots can be added in the ceiling of the grand variant (2L --> 4L).
Lamps not included, consult light source guide for our advice.



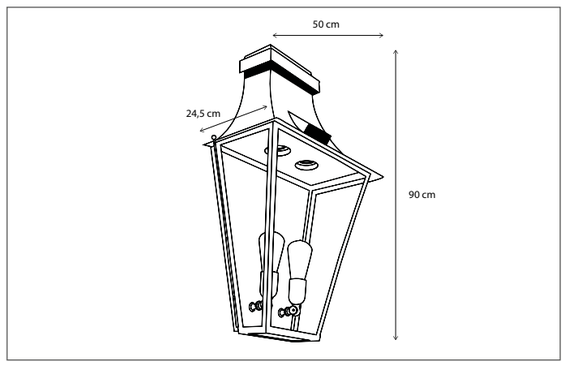

CODE	TYPE	FINISH	WATT	VOLT	FITTING
GRA002WAG	Gracieuze wall grand 2L	Bronze	2 x 15	230	E27
GRA004WAG	Gracieuze wall grand 4L	Bronze	2 x 15 + 2 x 8	230	E27 + GU10

Contact us for:
Customization & connectivity

Q-BRI

WALL

IP 44

Integrated LED 2700K
2 X 180 lumen

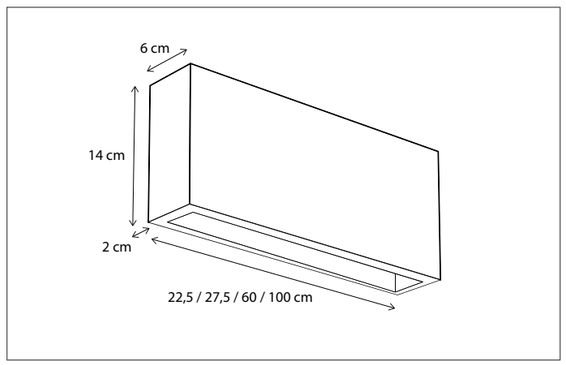



CODE	TYPE	FINISH	WATT	VOLT	FITTING
QBR0L2OUS	Q-Bri wall outdoor small 22,5 cm	Bronze	6	230	-
QBR0L2OUN	Q-Bri wall outdoor normal 27,5 cm	Bronze	6	230	-
QBR0L2OUL	Q-Bri wall outdoor medium 60 cm	Bronze	18	230	-
QBR1L2OUS	Q-Bri wall outdoor small 22,5 cm	Brushed nickel	6	230	-
QBR1L2OUN	Q-Bri wall outdoor normal 27,5 cm	Brushed nickel	6	230	-
QBR1L2OUL	Q-Bri wall outdoor medium 60 cm	Brushed nickel	18	230	-
QBR2L2OUS	Q-Bri wall outdoor small 22,5 cm	Chrome	6	230	-
QBR2L2OUN	Q-Bri wall outdoor normal 27,5 cm	Chrome	6	230	-
QBR2L2OUL	Q-Bri wall outdoor medium 60 cm	Chrome	18	230	-

Contact us for:
Customization & connectivity

SCAN & DISCOVER
THE ADVANTAGE OF BRASS

Authentage Catalogus 2024 Authentage Katalogus 2024 Authentage Catalogue 2024 Authentage Katalog 2024 Authentage Verlichting Authentage Lighting Authentage éclairage Authentage Beleuchtung
Authentage Webshop Authentage Verlichting Authentage Armaturen Authentage Winkels Authentage Verkooppunten Authentage Verdelers Authentage Verdeelpunten Authentage België Authentage Nederland Authentage Vente en Ligne Authentage Boutique Vente en Ligne Authentage Luminaires Authentage éclairage
Authentage Revendeurs Authentage Points de vente Authentage Magasins Authentage Boutiques Authentage Points de distribution Authentage France Authentage Lighting Authentage Retailers Authentage Dealers Authentage Distributors Authentage Points of sale Authentage Resellers Authentage England
Authentage Beleuchtung Authent Beleuchtung Authentage Leuchten Authentage Händler Authentage Shops Authentage Verkaufsstellen Authentage Vertriebspartner Authentage Deutschland Authentage E-shop Authentage Geschäfte Authentage Vertriebsstellen

www.Bcosy.be - Waarschoot - België - Belgique - Belgium - Belgien tel 0032 (0) 9 378 24 30 Mail: info@bcosy.be

Q-BRI LANTERN

WALL



2 integrated LED-strips (top and bottom).
The light reflects on polished brass inside, resulting in a warm glow.



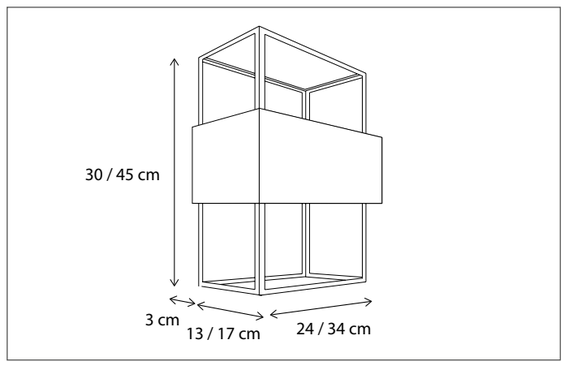

ELEGANCE

WALL



Lamps not included, consult light source guide for our advice.

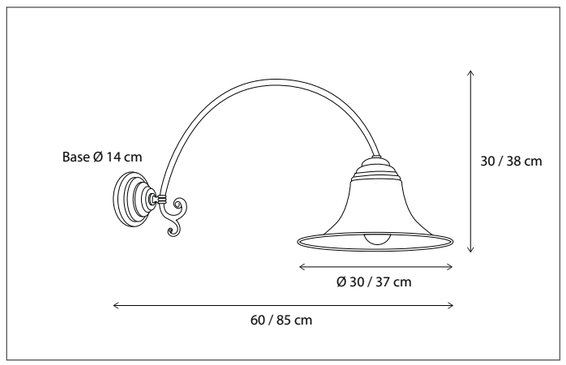



CODE	TYPE	FINISH	WATT	VOLT	FITTING
QLW0L2OU2	Q-Bri lantern wall normal	Bronze	11	230	-
QLW0L2OU3	Q-Bri lantern wall large	Bronze	15	230	-

CODE	TYPE	FINISH	WATT	VOLT	FITTING
ELE001001	Elégance wall petite	Bronze	15	230	E27
ELE001002	Elégance wall grande	Bronze	15	230	E27

SCAN & DISCOVER
THE ADVANTAGE OF BRASS

Contact us for:
Customization & connectivity

Contact us for:
Customization & connectivity

Authentage Catalogus 2024 Authentage Katalogus 2024 Authentage Catalogue 2024 Authentage Katalog 2024 Authentage Verlichting Authentage Lighting Authentage éclairage Authentage Beleuchtung
Authentage Webshop Authentage Verlichting Authentage Armaturen Authentage Winkels Authentage Verkooppunten Authentage Verdelers Authentage Verdeelpunten Authentage België Authentage Nederland Authentage Vente en Ligne Authentage Boutique Vente en Ligne Authentage Luminaires Authentage éclairage
Authentage Revendeurs Authentage Points de vente Authentage Magasins Authentage Boutiques Authentage Points de distribution Authentage France Authentage Lighting Authentage Retailers Authentage Dealers Authentage Distributors Authentage Points of sale Authentage Resellers Authentage England
Authentage Beleuchtung Authent Beleuchtung Authentage Leuchten Authentage Händler Authentage Shops Authentage Verkaufsstellen Authentage Vertriebspartner Authentage Deutschland Authentage E-shop Authentage Geschäfte Authentage Vertriebsstellen

www.Bcosy.be - Waarschoot - België - Belgique - Belgium - Belgien tel 0032 (0) 9 378 24 30 Mail: info@bcosy.be

ELEBASE 45°

WALL

IP 44

Lamps not included, consult light source guide for our advice.



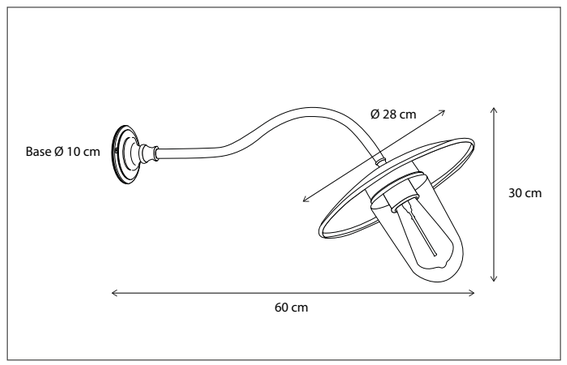

CODE	TYPE	FINISH	WATT	VOLT	FITTING
ELB001001	Elébase wall 45°	Bronze	15	230	E27
ELB101001	Elébase wall 45°	Brushed nickel	15	230	E27
ELB201001	Elébase wall 45°	Chrome	15	230	E27

ELEBASE 90°

WALL

IP 44

Lamps not included, consult light source guide for our advice.

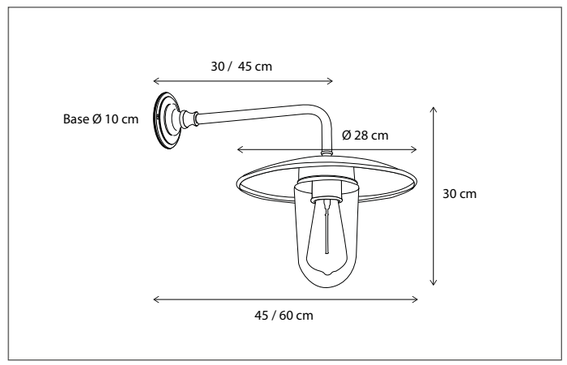



CODE	TYPE	FINISH	WATT	VOLT	FITTING
ELB001002	Elébase wall 90°	Bronze	15	230	E27
ELB001060	Elébase wall large 90°	Bronze	15	230	E27
ELB101002	Elébase wall 90°	Brushed nickel	15	230	E27
ELB101060	Elébase wall large 90°	Brushed nickel	15	230	E27
ELB201002	Elébase wall 90°	Chrome	15	230	E27
ELB201060	Elébase wall large 90°	Chrome	15	230	E27

SCAN & DISCOVER
THE ADVANTAGE OF BRASS

Contact us for:
Customization & connectivity

Contact us for:
Customization & connectivity

WALL I ELEBASE

OUTDOOR

Authentage Catalogus 2024 Authentage Katalogus 2024 Authentage Catalogue 2024 Authentage Katalog 2024 Authentage Verlichting Authentage Lighting Authentage éclairage Authentage Beleuchtung
Authentage Webshop Authentage Verlichting Authentage Armaturen Authentage Winkels Authentage Verkooppunten Authentage Verdelers Authentage Verdeelpunten Authentage België Authentage Nederland Authentage Vente en Ligne Authentage Boutique Vente en Ligne Authentage Luminaires Authentage éclairage
Authentage Revendeurs Authentage Points de vente Authentage Magasins Authentage Boutiques Authentage Points de distribution Authentage France Authentage Lighting Authentage Retailers Authentage Dealers Authentage Distributors Authentage Points of sale Authentage Resellers Authentage England
Authentage Beleuchtung Authent Beleuchtung Authentage Leuchten Authentage Händler Authentage Shops Authentage Verkaufsstellen Authentage Vertriebspartner Authentage Deutschland Authentage E-shop Authentage Geschäfte Authentage Vertriebsstellen

www.Bcosy.be - Waarschoot - België - Belgique - Belgium - Belgien tel 0032 (0) 9 378 24 30 Mail: info@bcosy.be

MACRO MOUNTED BASE

WALL

For warmer light, add Kelvin Killer® - see p 474.
Lamps not included, consult light source guide for our advice.
See page p487 for a compatible driver.



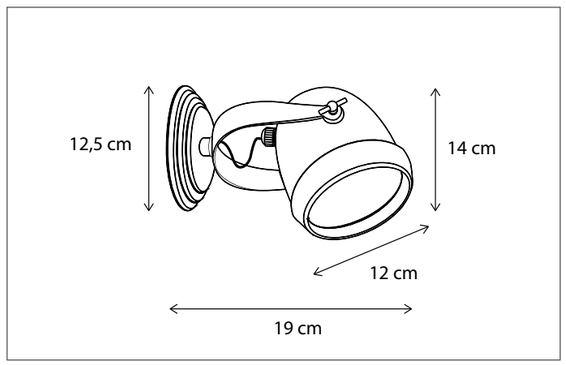

CODE	TYPE	FINISH	WATT	VOLT	FITTING
MAC001A12	Macro wall	Bronze	12	12	G53
MAC101A12	Macro wall	Brushed nickel	12	12	G53
MAC201A12	Macro wall	Chrome	12	12	G53

Contact us for:
Customization & connectivity

MACRO ON ROUND BASE

WALL

For warmer light, add Kelvin Killer® - see p 474.
Lamps not included, consult light source guide for our advice.

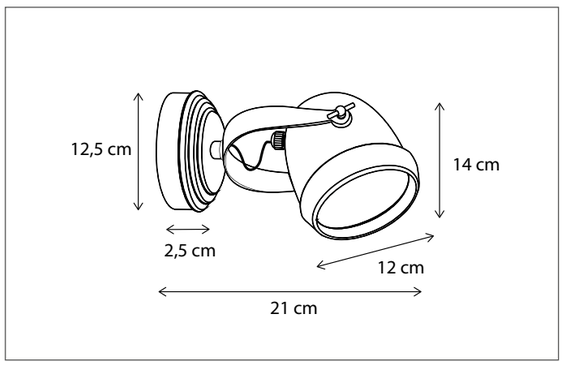



CODE	TYPE	FINISH	WATT	VOLT	FITTING
MAC001A22	Macro wall (driver incl.)	Bronze	12	230	G53
MAC101A22	Macro wall (driver incl.)	Brushed nickel	12	230	G53
MAC201A22	Macro wall (driver incl.)	Chrome	12	230	G53

Contact us for:
Customization & connectivity

SCAN & DISCOVER
THE ADVANTAGE OF BRASS

SCAN & DISCOVER
OUR PATENTED KELVIN KILLER®

WALL I MACRO
OUTDOOR

Authentage Catalogus 2024 Authentage Katalogus 2024 Authentage Catalogue 2024 Authentage Katalog 2024 Authentage Verlichting Authentage Lighting Authentage éclairage Authentage Beleuchtung
Authentage Webshop Authentage Verlichting Authentage Armaturen Authentage Winkels Authentage Verkooppunten Authentage Verdelers Authentage Verdeelpunten Authentage België Authentage Nederland Authentage Vente en Ligne Authentage Boutique Vente en Ligne Authentage Luminaires Authentage éclairage
Authentage Revendeurs Authentage Points de vente Authentage Magasins Authentage Boutiques Authentage Points de distribution Authentage France Authentage Lighting Authentage Retailers Authentage Dealers Authentage Distributors Authentage Points of sale Authentage Resellers Authentage England
Authentage Beleuchtung Authent Beleuchtung Authentage Leuchten Authentage Händler Authentage Shops Authentage Verkaufsstellen Authentage Vertriebspartner Authentage Deutschland Authentage E-shop Authentage Geschäfte Authentage Vertriebsstellen

www.Bcosy.be - Waarschoot - België - Belgique - Belgium - Belgien tel 0032 (0) 9 378 24 30 Mail: info@bcosy.be

MACRO ON PROFILE

WALL

For warmer light, add Kelvin Killer® - see p 474.
Lamps not included, consult light source guide for our advice.



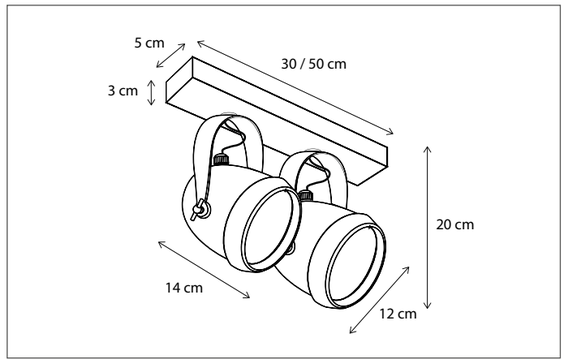

CODE	TYPE	FINISH	WATT	VOLT	FITTING
MAC002P22	Macro on profile 30 cm - 2L	Bronze	2 x 12	230	G53
MAC003P22	Macro on profile 50 cm - 3L	Bronze	3 x 12	230	G53
MAC102P22	Macro on profile 30 cm - 2L	Brushed nickel	2 x 12	230	G53
MAC103P22	Macro on profile 50 cm - 3L	Brushed nickel	3 x 12	230	G53
MAC202P22	Macro on profile 30 cm - 2L	Chrome	2 x 12	230	G53
MAC203P22	Macro on profile 50 cm - 3L	Chrome	3 x 12	230	G53

MACRO POWER PROJECTOR

WALL

Suitable for illumination of big objects. Standard with CDM-R.
For warmer light, add Kelvin Killer® see p474.

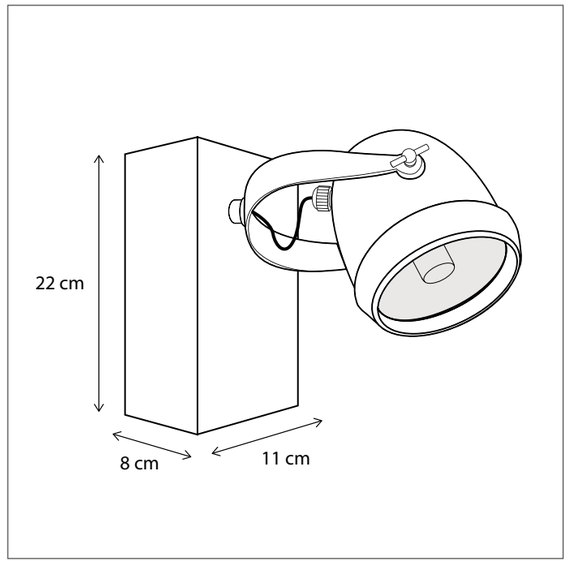



CODE	TYPE	FINISH	WATT	VOLT	FITTING
MAC0C1B35	Macro power projector on box	Bronze	35	230	GX8,5
MAC0C1B70	Macro power projector on box	Bronze	70	230	GX8,5
MAC1C1B35	Macro power projector on box	Brushed nickel	35	230	GX8,5
MAC1C1B70	Macro power projector on box	Brushed nickel	70	230	GX8,5
MAC2C1B35	Macro power projector on box	Chrome	35	230	GX8,5
MAC2C1B70	Macro power projector on box	Chrome	70	230	GX8,5

SCAN & DISCOVER
THE ADVANTAGE OF BRASS

Contact us for:
Customization & connectivity

Contact us for:
Customization & connectivity

SCAN & DISCOVER
OUR PATENTED KELVIN KILLER®

WALL I MACRO
OUTDOOR

Authentage Catalogus 2024 Authentage Katalogus 2024 Authentage Catalogue 2024 Authentage Katalog 2024 Authentage Verlichting Authentage Lighting Authentage éclairage Authentage Beleuchtung
Authentage Webshop Authentage Verlichting Authentage Armaturen Authentage Winkels Authentage Verkooppunten Authentage Verdelers Authentage Verdeelpunten Authentage België Authentage Nederland Authentage Vente en Ligne Authentage Boutique Vente en Ligne Authentage Luminaires Authentage éclairage
Authentage Revendeurs Authentage Points de vente Authentage Magasins Authentage Boutiques Authentage Points de distribution Authentage France Authentage Lighting Authentage Retailers Authentage Dealers Authentage Distributors Authentage Points of sale Authentage Resellers Authentage England
Authentage Beleuchtung Authent Beleuchtung Authentage Leuchten Authentage Händler Authentage Shops Authentage Verkaufsstellen Authentage Vertriebspartner Authentage Deutschland Authentage E-shop Authentage Geschäfte Authentage Vertriebsstellen

www.Bcosy.be - Waarschoot - België - Belgique - Belgium - Belgien tel 0032 (0) 9 378 24 30 Mail: info@bcosy.be

ELIGNE

WALL

IP 44 | DI

Motion or day-night sensor can be integratd in the product, see p 491 accessories.



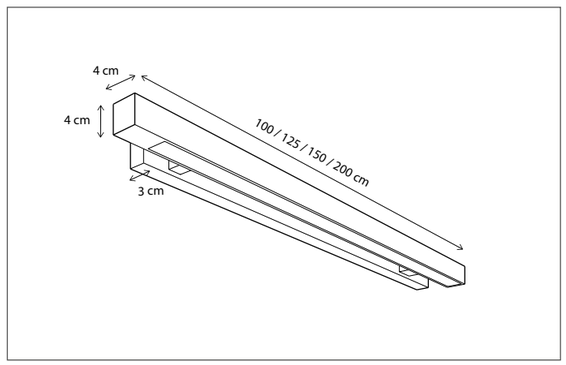

CODE	TYPE	FINISH	WATT	VOLT	FITTING
ELW002100	Eligne wall 100 cm	Bronze	25	230	-
ELW002125	Eligne wall 125 cm	Bronze	32	230	-
ELW002150	Eligne wall 150 cm	Bronze	39	230	-
ELW002200	Eligne wall 200 cm	Bronze	56	230	-
ELW102100	Eligne wall 100 cm	Brushed nickel	25	230	-
ELW102125	Eligne wall 125 cm	Brushed nickel	32	230	-
ELW102150	Eligne wall 150 cm	Brushed nickel	39	230	-
ELW102200	Eligne wall 200 cm	Brushed nickel	56	230	-
ELW202100	Eligne wall 100 cm	Chrome	25	230	-
ELW202125	Eligne wall 125 cm	Chrome	32	230	-
ELW202150	Eligne wall 150 cm	Chrome	39	230	-
ELW202200	Eligne wall 200 cm	Chrome	56	230	-

Contact us for:
Customization & connectivity

GRILLE CARRE

WALL

IP 54 | DALI

Integrated LED (2700K).

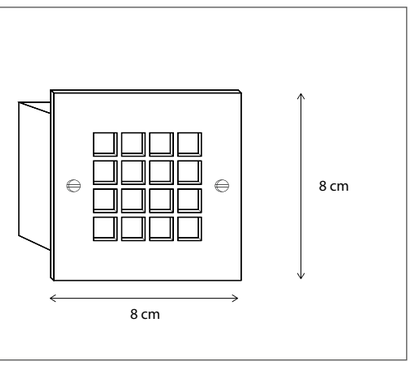



CODE	TYPE	FINISH	WATT	VOLT	FITTING
GRI001081	Grille carré 8 cm	Bronze	4	230	-
GRI101081	Grille carré 8 cm	Brushed nickel	4	230	-
GRI201081	Grille carré 8 cm	Chrome	4	230	-
GRI301081	Grille carré 8 cm	Polished brass	4	230	-

Contact us for:
Customization & connectivity

SCAN & DISCOVER
THE ADVANTAGE OF BRASS

Authentage Catalogus 2024 Authentage Katalogus 2024 Authentage Catalogue 2024 Authentage Katalog 2024 Authentage Verlichting Authentage Lighting Authentage éclairage Authentage Beleuchtung
Authentage Webshop Authentage Verlichting Authentage Armaturen Authentage Winkels Authentage Verkooppunten Authentage Verdelers Authentage Verdeelpunten Authentage België Authentage Nederland Authentage Vente en Ligne Authentage Boutique Vente en Ligne Authentage Luminaires Authentage éclairage
Authentage Revendeurs Authentage Points de vente Authentage Magasins Authentage Boutiques Authentage Points de distribution Authentage France Authentage Lighting Authentage Retailers Authentage Dealers Authentage Distributors Authentage Points of sale Authentage Resellers Authentage England
Authentage Beleuchtung Authent Beleuchtung Authentage Leuchten Authentage Händler Authentage Shops Authentage Verkaufsstellen Authentage Vertriebspartner Authentage Deutschland Authentage E-shop Authentage Geschäfte Authentage Vertriebsstellen

www.Bcosy.be - Waarschoot - België - Belgique - Belgium - Belgien tel 0032 (0) 9 378 24 30 Mail: info@bcosy.be

GRILLE CARRE DECO

WALL

IP 54

Integrated LED (2700K).

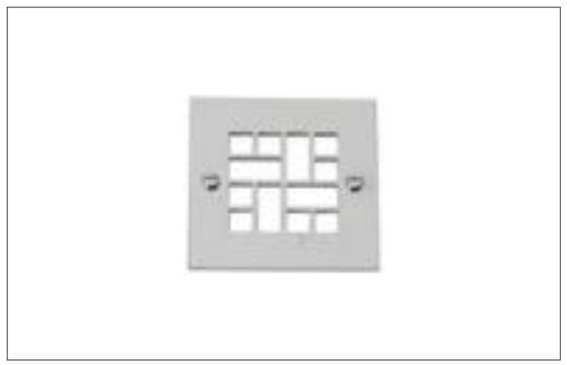

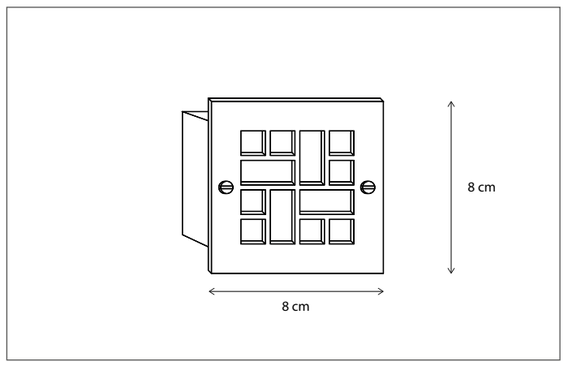

CODE	TYPE	FINISH	WATT	VOLT	FITTING
GRI001003	Grille carré déco	Bronze	4	230	-
GRI101003	Grille carré déco	Brushed nickel	4	230	-
GRI201003	Grille carré déco	Chrome	4	230	-
GRI301003	Grille carré déco	Polished brass	4	230	-

Contact us for:

Customization & connectivity

GRILLE LOUNGE

WALL

IP 54

Integrated LED (2700K).

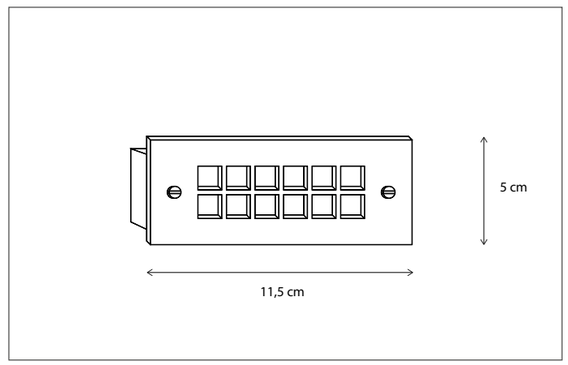



CODE	TYPE	FINISH	WATT	VOLT	FITTING
GRI001002	Grille lounge	Bronze	4	230	-
GRI101002	Grille lounge	Brushed nickel	4	230	-
GRI201002	Grille lounge	Chrome	4	230	-
GRI301002	Grille lounge	Polished brass	4	230	-

Contact us for:

Customization & connectivity

Authentage Catalogus 2024 Authentage Katalogus 2024 Authentage Catalogue 2024 Authentage Katalog 2024 Authentage Verlichting Authentage Lighting Authentage éclairage Authentage Beleuchtung
Authentage Webshop Authentage Verlichting Authentage Armaturen Authentage Winkels Authentage Verkooppunten Authentage Verdelers Authentage Verdeelpunten Authentage België Authentage Nederland Authentage Vente en Ligne Authentage Boutique Vente en Ligne Authentage Luminaires Authentage éclairage
Authentage Revendeurs Authentage Points de vente Authentage Magasins Authentage Boutiques Authentage Points de distribution Authentage France Authentage Lighting Authentage Retailers Authentage Dealers Authentage Distributors Authentage Points of sale Authentage Resellers Authentage England
Authentage Beleuchtung Authent Beleuchtung Authentage Leuchten Authentage Händler Authentage Shops Authentage Verkaufsstellen Authentage Vertriebspartner Authentage Deutschland Authentage E-shop Authentage Geschäfte Authentage Vertriebsstellen

www.Bcosy.be - Waarschoot - België - Belgique - Belgium - Belgien tel 0032 (0) 9 378 24 30 Mail: info@bcosy.be

BEAUTIQUE

WALL

Led disc is included, the driver not.
Select the correct driver, see p486 accessories.
Minimal built-in depth of 12cm required for installation.

396



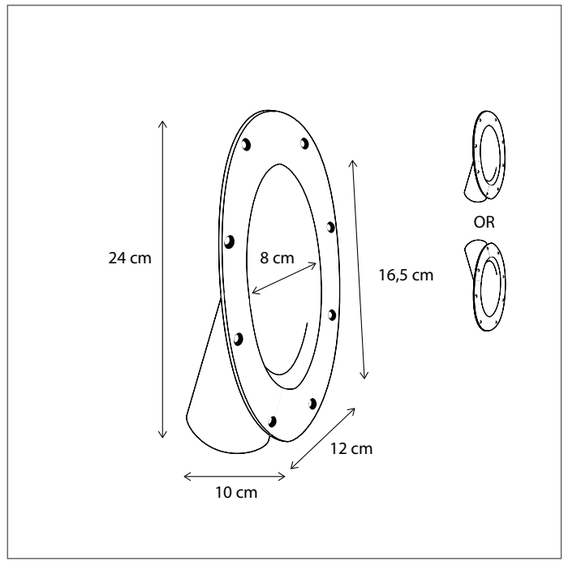

CODE	TYPE	FINISH	WATT	VOLT	FITTING
BEP0L124V	Beautique pipe	Bronze	2,4	24	-
BEP1L124V	Beautique pipe	Brushed nickel	2,4	24	-
BEP2L124V	Beautique pipe	Chrome	2,4	24	-

OUTDOOR

SCAN & DISCOVER
THE ADVANTAGE OF BRASS

Contact us for:
Customization & connectivity

Authentage Catalogus 2024 Authentage Katalogus 2024 Authentage Catalogue 2024 Authentage Katalog 2024 Authentage Verlichting Authentage Lighting Authentage éclairage Authentage Beleuchtung
Authentage Webshop Authentage Verlichting Authentage Armaturen Authentage Winkels Authentage Verkooppunten Authentage Verdelers Authentage Verdeelpunten Authentage België Authentage Nederland Authentage Vente en Ligne Authentage Boutique Vente en Ligne Authentage Luminaires Authentage éclairage
Authentage Revendeurs Authentage Points de vente Authentage Magasins Authentage Boutiques Authentage Points de distribution Authentage France Authentage Lighting Authentage Retailers Authentage Dealers Authentage Distributors Authentage Points of sale Authentage Resellers Authentage England
Authentage Beleuchtung Authent Beleuchtung Authentage Leuchten Authentage Händler Authentage Shops Authentage Verkaufsstellen Authentage Vertriebspartner Authentage Deutschland Authentage E-shop Authentage Geschäfte Authentage Vertriebsstellen

www.Bcosy.be - Waarschoot - België - Belgique - Belgium - Belgien tel 0032 (0) 9 378 24 30 Mail: info@bcosy.be

MICRO 400
MACRO 401
CHARMOND 402
MACRO POWER PROJECTOR 404

Spike

OUTDOOR



CATALOGUE I OUTDOOR I SPIKE

Authentage Catalogus 2024 Authentage Katalogus 2024 Authentage Catalogue 2024 Authentage Katalog 2024 Authentage Verlichting Authentage Lighting Authentage éclairage Authentage Beleuchtung
Authentage Webshop Authentage Verlichting Authentage Armaturen Authentage Winkels Authentage Verkooppunten Authentage Verdelers Authentage Verdeelpunten Authentage België Authentage Nederland Authentage Vente en Ligne Authentage Boutique Vente en Ligne Authentage Luminaires Authentage éclairage
Authentage Revendeurs Authentage Points de vente Authentage Magasins Authentage Boutiques Authentage Points de distribution Authentage France Authentage Lighting Authentage Retailers Authentage Dealers Authentage Distributors Authentage Points of sale Authentage Resellers Authentage England
Authentage Beleuchtung Authent Beleuchtung Authentage Leuchten Authentage Händler Authentage Shops Authentage Verkaufsstellen Authentage Vertriebspartner Authentage Deutschland Authentage E-shop Authentage Geschäfte Authentage Vertriebsstellen

www.Bcosy.be - Waarschoot - België - Belgique - Belgium - Belgien tel 0032 (0) 9 378 24 30 Mail: info@bcosy.be

MICRO

SPIKE

For warmer light, add Kelvin Killer® see p474.
For enhanced light dispersion or anti-glare effect, add frosted glass filter see p474.
Lamps not included, consult light source guide for our advice.



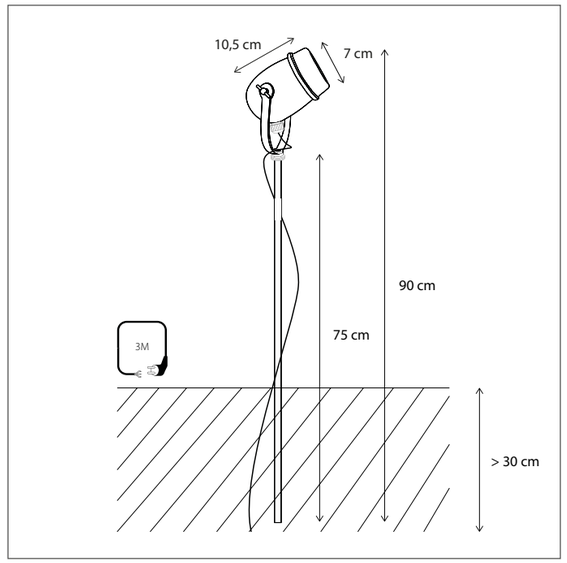

CODE	TYPE	FINISH	WATT	VOLT	FITTING
MIC001005	Micro on pin	Bronze	6	230	GU10
MIC101005	Micro on pin	Brushed nickel	6	230	GU10
MIC201005	Micro on pin	Chrome	6	230	GU10

Contact us for:
Customization & connectivity

MACRO

SPIKE

For warmer light, add Kelvin Killer® see p474.
Select the correct driver, see p486 accessories.
Lamps not included, consult light source guide for our advice.

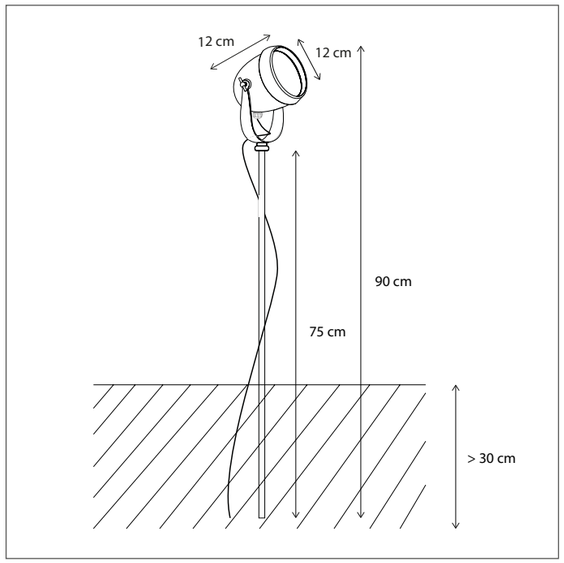



CODE	TYPE	FINISH	WATT	VOLT	FITTING
MAC001S12	Macro on spike	Bronze	12	12	G53
MAC101S12	Macro on spike	Brushed nickel	12	12	G53
MAC201S12	Macro on spike	Chrome	12	12	G53

Contact us for:
Customization & connectivity

SCAN & DISCOVER
OUR PATENTED KELVIN KILLER

SCAN & DISCOVER
THE ADVANTAGE OF BRASS

Authentage Catalogus 2024 Authentage Katalogus 2024 Authentage Catalogue 2024 Authentage Katalog 2024 Authentage Verlichting Authentage Lighting Authentage éclairage Authentage Beleuchtung
Authentage Webshop Authentage Verlichting Authentage Armaturen Authentage Winkels Authentage Verkooppunten Authentage Verdelers Authentage Verdeelpunten Authentage België Authentage Nederland Authentage Vente en Ligne Authentage Boutique Vente en Ligne Authentage Luminaires Authentage éclairage
Authentage Revendeurs Authentage Points de vente Authentage Magasins Authentage Boutiques Authentage Points de distribution Authentage France Authentage Lighting Authentage Retailers Authentage Dealers Authentage Distributors Authentage Points of sale Authentage Resellers Authentage England
Authentage Beleuchtung Authent Beleuchtung Authentage Leuchten Authentage Händler Authentage Shops Authentage Verkaufsstellen Authentage Vertriebspartner Authentage Deutschland Authentage E-shop Authentage Geschäfte Authentage Vertriebsstellen

www.Bcosy.be - Waarschoot - België - Belgique - Belgium - Belgien tel 0032 (0) 9 378 24 30 Mail: info@bcosy.be



Available in 2 versions: integrated LED (2200K) or retrofit bulb (G4).
Select the correct driver, see p486 accessories.
Possible to integrate entrance fade dimming, enabling 2 levels of light intensity.
Lamps (G4-variant) not included, consult light source guide for our advice.



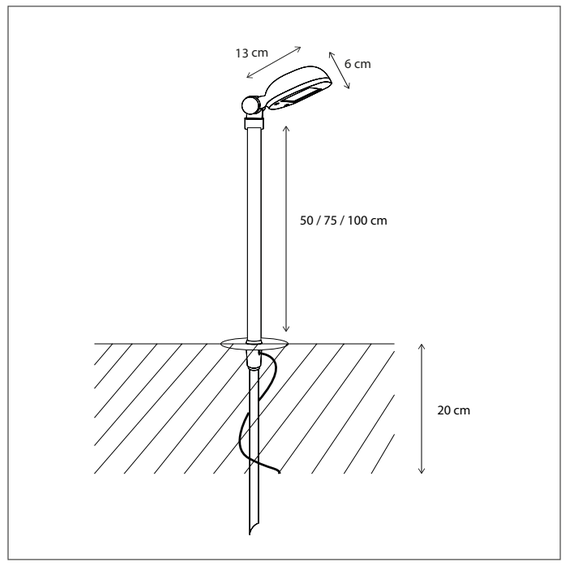

CODE	TYPE	FINISH	WATT	VOLT	FITTING
CHA0L1P51	Charmond on pin 50 cm	Bronze	2,4	24	-
CHA0L1P75	Charmond on pin 75 cm	Bronze	2,4	24	-
CHA0L1P10	Charmond on pin 100 cm	Bronze	2,4	24	-
CHA1L1P51	Charmond on pin 50 cm	Brushed nickel	2,4	24	-
CHA1L1P75	Charmond on pin 75 cm	Brushed nickel	2,4	24	-
CHA1L1P10	Charmond on pin 100 cm	Brushed nickel	2,4	24	-
CHA2L1P51	Charmond on pin 50 cm	Chrome	2,4	24	-
CHA2L1P75	Charmond on pin 75 cm	Chrome	2,4	24	-
CHA2L1P10	Charmond on pin 100 cm	Chrome	2,4	24	-

SCAN & DISCOVER
THE ADVANTAGE OF BRASS

Contact us for:
Customization & connectivity

CHARMOND

SPIKE

CODE	TYPE	FINISH	WATT	VOLT	FITTING
CHA2L1P51	Charmond on pin 50 cm	Chrome	2,4	24	-
CHA2L1P75	Charmond on pin 75 cm	Chrome	2,4	24	-
CHA2L1P10	Charmond on pin 100 cm	Chrome	2,4	24	-
CHA001P51	Charmond on pin 50 cm	Bronze	4	12	G4
CHA001P75	Charmond on pin 75 cm	Bronze	4	12	G4
CHA001P10	Charmond on pin 100 cm	Bronze	4	12	G4
CHA101P51	Charmond on pin 50 cm	Brushed nickel	4	12	G4
CHA101P75	Charmond on pin 75 cm	Brushed nickel	4	12	G4
CHA101P10	Charmond on pin 100 cm	Brushed nickel	4	12	G4
CHA201P51	Charmond on pin 50 cm	Chrome	4	12	G4
CHA201P75	Charmond on pin 75 cm	Chrome	4	12	G4
CHA201P10	Charmond on pin 100 cm	Chrome	4	12	G4

Contact us for:
Customization & connectivity

SPIKE I CHARMOND

OUTDOOR

Authentage Catalogus 2024 Authentage Katalogus 2024 Authentage Catalogue 2024 Authentage Katalog 2024 Authentage Verlichting Authentage Lighting Authentage éclairage Authentage Beleuchtung
Authentage Webshop Authentage Verlichting Authentage Armaturen Authentage Winkels Authentage Verkooppunten Authentage Verdelers Authentage Verdeelpunten Authentage België Authentage Nederland Authentage Vente en Ligne Authentage Boutique Vente en Ligne Authentage Luminaires Authentage éclairage
Authentage Revendeurs Authentage Points de vente Authentage Magasins Authentage Boutiques Authentage Points de distribution Authentage France Authentage Lighting Authentage Retailers Authentage Dealers Authentage Distributors Authentage Points of sale Authentage Resellers Authentage England
Authentage Beleuchtung Authent Beleuchtung Authentage Leuchten Authentage Händler Authentage Shops Authentage Verkaufsstellen Authentage Vertriebspartner Authentage Deutschland Authentage E-shop Authentage Geschäfte Authentage Vertriebsstellen

www.Bcosy.be - Waarschoot - België - Belgique - Belgium - Belgien tel 0032 (0) 9 378 24 30 Mail: info@bcosy.be

MACRO POWER PROJECTOR

SPIKE

IP 55 DI

Suitable for illumination of big objects. Standard with CDM-R.
For warmer light, add Kelvin Killer® see p474.



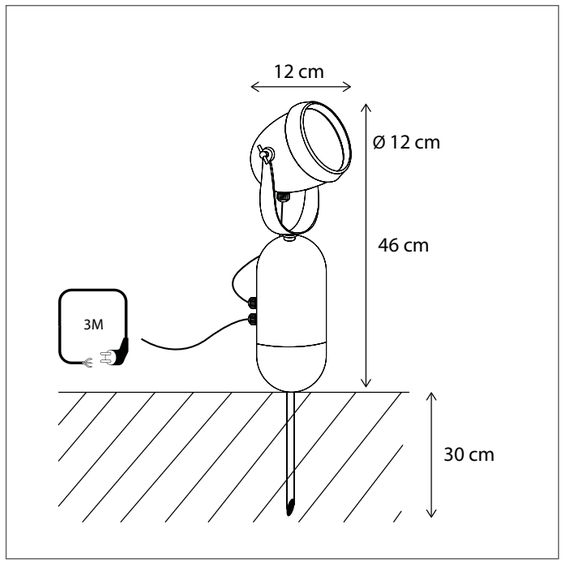

CODE	TYPE	FINISH	WATT	VOLT	FITTING
MAC0C1P35	Macro power projector	Bronze	35	230	GX8,5
MAC0C1P70	Macro power projector	Bronze	70	230	GX8,5
MAC1C1P35	Macro power projector	Brushed nickel	35	230	GX8,5
MAC1C1P70	Macro power projector	Brushed nickel	70	230	GX8,5
MAC2C1P35	Macro power projector	Chrome	35	230	GX8,5
MAC2C1P70	Macro power projector	Chrome	70	230	GX8,5

SCAN & DISCOVER
THE ADVANTAGE OF BRASS

Contact us for:
Customization & connectivity



Authentage Catalogus 2024 Authentage Katalogus 2024 Authentage Catalogue 2024 Authentage Katalog 2024 Authentage Verlichting Authentage Lighting Authentage éclairage Authentage Beleuchtung
Authentage Webshop Authentage Verlichting Authentage Armaturen Authentage Winkels Authentage Verkooppunten Authentage Verdelers Authentage Verdeelpunten Authentage België Authentage Nederland Authentage Vente en Ligne Authentage Boutique Vente en Ligne Authentage Luminaires Authentage éclairage
Authentage Revendeurs Authentage Points de vente Authentage Magasins Authentage Boutiques Authentage Points de distribution Authentage France Authentage Lighting Authentage Retailers Authentage Dealers Authentage Distributors Authentage Points of sale Authentage Resellers Authentage England
Authentage Beleuchtung Authent Beleuchtung Authentage Leuchten Authentage Händler Authentage Shops Authentage Verkaufsstellen Authentage Vertriebspartner Authentage Deutschland Authentage E-shop Authentage Geschäfte Authentage Vertriebsstellen

www.Bcosy.be - Waarschoot - België - Belgique - Belgium - Belgien tel 0032 (0) 9 378 24 30 Mail: info@bcosy.be

Ground & Pole

OUTDOOR

BALUME 408
PIPILIER 409
NOBLESSE 410
CHARMOND 414
GALED 420
VITRINE 426
GRACIEUZE 428
BEAUTIQUE 436
ALB 437



CATALOGUE I OUTDOOR I GROUND & POLE

Authentage Catalogus 2024 Authentage Katalogus 2024 Authentage Catalogue 2024 Authentage Katalog 2024 Authentage Verlichting Authentage Lighting Authentage éclairage Authentage Beleuchtung
Authentage Webshop Authentage Verlichting Authentage Armaturen Authentage Winkels Authentage Verkooppunten Authentage Verdelers Authentage Verdeelpunten Authentage België Authentage Nederland Authentage Vente en Ligne Authentage Boutique Vente en Ligne Authentage Luminaires Authentage éclairage
Authentage Revendeurs Authentage Points de vente Authentage Magasins Authentage Boutiques Authentage Points de distribution Authentage France Authentage Lighting Authentage Retailers Authentage Dealers Authentage Distributors Authentage Points of sale Authentage Resellers Authentage England
Authentage Beleuchtung Authent Beleuchtung Authentage Leuchten Authentage Händler Authentage Shops Authentage Verkaufsstellen Authentage Vertriebspartner Authentage Deutschland Authentage E-shop Authentage Geschäfte Authentage Vertriebsstellen

www.Bcosy.be - Waarschoot - België - Belgique - Belgium - Belgien tel 0032 (0) 9 378 24 30 Mail: info@bcosy.be

BALUME

GROUND & POLE

IP 43

The tropical and extremely strong hardwood padouk is used for the pole. Sun exposure (UV light) induces a rapid colour change from red to grey.

For warmer light, add Kelvin Killer® - see p 474.

Lamps not included, consult light source guide for our advice.



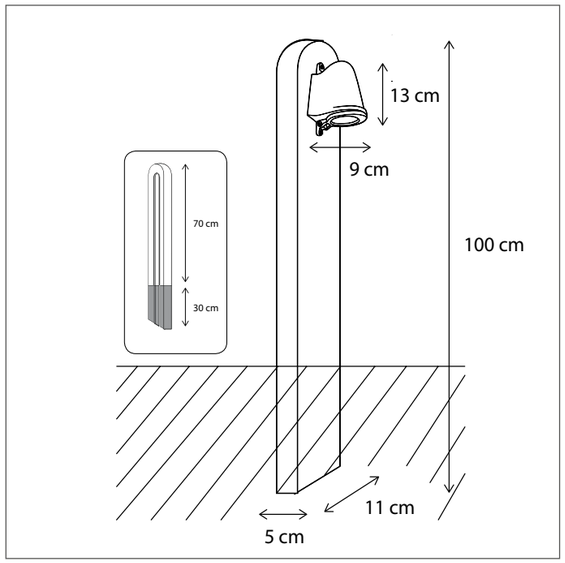

CODE	TYPE	FINISH	WATT	VOLT	FITTING
BAL001003	Balume on wooden pole	Bronze	8	230	GU10
BAL101003	Balume on wooden pole	Brushed nickel	8	230	GU10
BAL201003	Balume on wooden pole	Chrome	8	230	GU10
BAL301003	Balume on wooden pole	Polished brass	8	230	GU10

PIPILIER

GROUND & POLE

IP 44

Driver, connection box & resin included.
Integrated LED. 2700K. 180Lm.

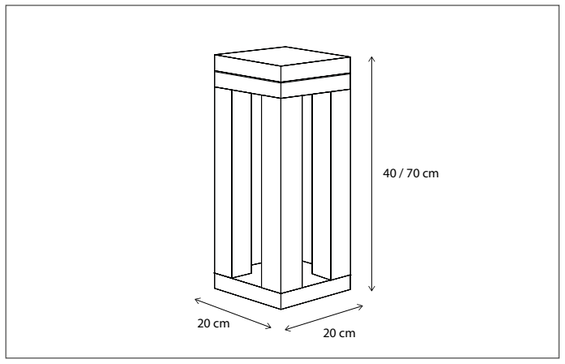



CODE	TYPE	FINISH	WATT	VOLT	FITTING
PIPLED001	Pipilier 40 cm	Blue stone	2,3	230	-
PIPLED002	Pipilier 70 cm	Blue stone	2,3	230	-

OUTDOOR

SCAN & DISCOVER
THE ADVANTAGE OF BRASS

Contact us for:
Customization & connectivity

Contact us for:
Customization & connectivity

Authentage Catalogus 2024 Authentage Katalogus 2024 Authentage Catalogue 2024 Authentage Katalog 2024 Authentage Verlichting Authentage Lighting Authentage éclairage Authentage Beleuchtung
Authentage Webshop Authentage Verlichting Authentage Armaturen Authentage Winkels Authentage Verkooppunten Authentage Verdelers Authentage Verdeelpunten Authentage België Authentage Nederland Authentage Vente en Ligne Authentage Boutique Vente en Ligne Authentage Luminaires Authentage éclairage
Authentage Revendeurs Authentage Points de vente Authentage Magasins Authentage Boutiques Authentage Points de distribution Authentage France Authentage Lighting Authentage Retailers Authentage Dealers Authentage Distributors Authentage Points of sale Authentage Resellers Authentage England
Authentage Beleuchtung Authent Beleuchtung Authentage Leuchten Authentage Händler Authentage Shops Authentage Verkaufsstellen Authentage Vertriebspartner Authentage Deutschland Authentage E-shop Authentage Geschäfte Authentage Vertriebsstellen

www.Bcosy.be - Waarschoot - België - Belgique - Belgium - Belgien tel 0032 (0) 9 378 24 30 Mail: info@bcosy.be

NOBLESSE ON FOOT BELLEFEU

GROUND & POLE

Integrated push dimmer for adjustable candle effect.

For control/connectivity options, see p494 accessories.



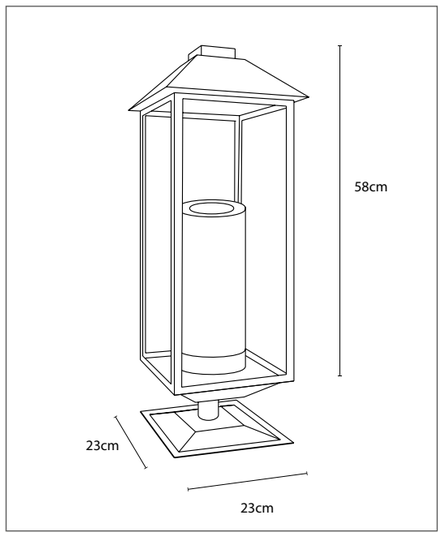

CODE	TYPE	FINISH	WATT	VOLT	FITTING
NBL0B1SM5	Noblesse bellefeu on foot - 1 candle alabaster	Bronze	2,4	230	-

Contact us for:
Customization & connectivity

NOBLESSE ON FOOT E27

GROUND & POLE

Lamps not included, consult light source guide for our advice.

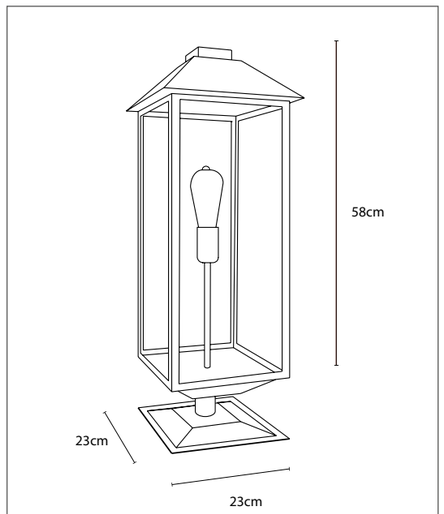



CODE	TYPE	FINISH	WATT	VOLT	FITTING
NBL001SM5	Noblesse on foot E27 1L	Bronze	15	230	E27

Contact us for:
Customization & connectivity

SCAN & DISCOVER
THE ADVANTAGE OF BRASS

Authentage Catalogus 2024 Authentage Katalogus 2024 Authentage Catalogue 2024 Authentage Katalog 2024 Authentage Verlichting Authentage Lighting Authentage éclairage Authentage Beleuchtung
Authentage Webshop Authentage Verlichting Authentage Armaturen Authentage Winkels Authentage Verkooppunten Authentage Verdelers Authentage Verdeelpunten Authentage België Authentage Nederland Authentage Vente en Ligne Authentage Boutique Vente en Ligne Authentage Luminaires Authentage éclairage
Authentage Revendeurs Authentage Points de vente Authentage Magasins Authentage Boutiques Authentage Points de distribution Authentage France Authentage Lighting Authentage Retailers Authentage Dealers Authentage Distributors Authentage Points of sale Authentage Resellers Authentage England
Authentage Beleuchtung Authent Beleuchtung Authentage Leuchten Authentage Händler Authentage Shops Authentage Verkaufsstellen Authentage Vertriebspartner Authentage Deutschland Authentage E-shop Authentage Geschäfte Authentage Vertriebsstellen

www.Bcosy.be - Waarschoot - België - Belgique - Belgium - Belgien tel 0032 (0) 9 378 24 30 Mail: info@bcosy.be

NOBLESSE BOTTOM PLATE BELLEFEU

GROUND & POLE

Integrated push dimmer for adjustable candle effect.

For control/connectivity options, see p494 accessories.



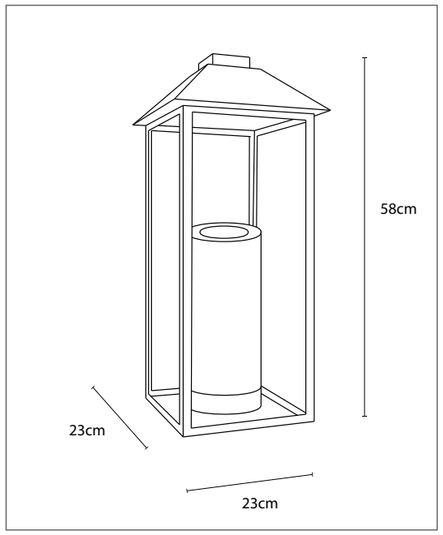

CODE	TYPE	FINISH	WATT	VOLT	FITTING
NBL0B1PM5	Noblesse bellefeu bottom plate - 1 candle alabaster	Bronze	2,4	230	-

Contact us for:
Customization & connectivity

NOBLESSE BOTTOM PLATE E27

GROUND & POLE

Lamps not included, consult light source guide for our advice.

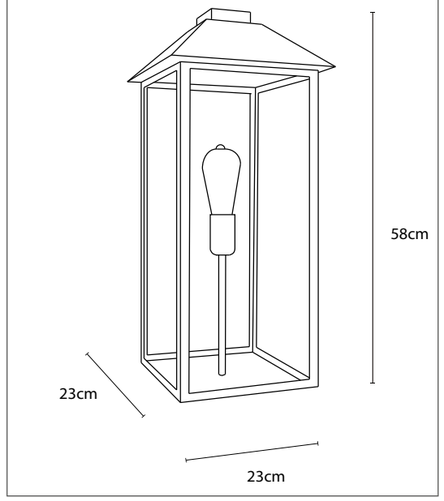



CODE	TYPE	FINISH	WATT	VOLT	FITTING
NBL001PM5	Noblesse E27 bottom plate	Bronze	15	230	E27

Contact us for:
Customization & connectivity

SCAN & DISCOVER
THE ADVANTAGE OF BRASS

Authentage Catalogus 2024 Authentage Katalogus 2024 Authentage Catalogue 2024 Authentage Katalog 2024 Authentage Verlichting Authentage Lighting Authentage éclairage Authentage Beleuchtung
Authentage Webshop Authentage Verlichting Authentage Armaturen Authentage Winkels Authentage Verkooppunten Authentage Verdelers Authentage Verdeelpunten Authentage België Authentage Nederland Authentage Vente en Ligne Authentage Boutique Vente en Ligne Authentage Luminaires Authentage éclairage
Authentage Revendeurs Authentage Points de vente Authentage Magasins Authentage Boutiques Authentage Points de distribution Authentage France Authentage Lighting Authentage Retailers Authentage Dealers Authentage Distributors Authentage Points of sale Authentage Resellers Authentage England
Authentage Beleuchtung Authent Beleuchtung Authentage Leuchten Authentage Händler Authentage Shops Authentage Verkaufsstellen Authentage Vertriebspartner Authentage Deutschland Authentage E-shop Authentage Geschäfte Authentage Vertriebsstellen

www.Bcosy.be - Waarschoot - België - Belgique - Belgium - Belgien tel 0032 (0) 9 378 24 30 Mail: info@bcosy.be



Available in 2 versions: integrated LED (2200K) or retrofit bulb (G4).
Select the correct driver, see p486 accessories.
Possible to integrate entrance fade dimming, enabling 2 levels of light intensity.
Lamps (G4-variant) not included, consult light source guide for our advice.



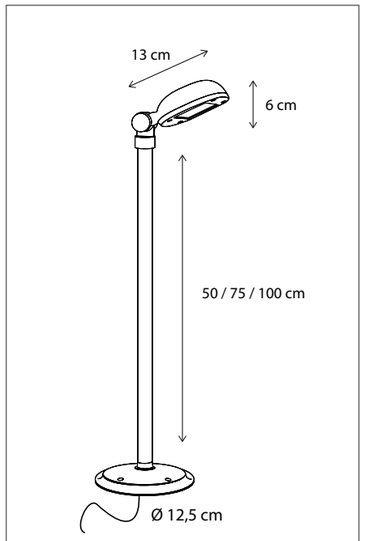

CODE	TYPE	FINISH	WATT	VOLT	FITTING
CHA0L1B51	Charmond on base 50 cm	Bronze	2,4	24	-
CHA0L1B75	Charmond on base 75 cm	Bronze	2,4	24	-
CHA0L1B10	Charmond on base 100 cm	Bronze	2,4	24	-
CHA1L1B51	Charmond on base 50 cm	Brushed nickel	2,4	24	-
CHA1L1B75	Charmond on base 75 cm	Brushed nickel	2,4	24	-
CHA1L1B10	Charmond on base 100 cm	Brushed nickel	2,4	24	-
CHA2L1B51	Charmond on base 50 cm	Chrome	2,4	24	-
CHA2L1B75	Charmond on base 75 cm	Chrome	2,4	24	-
CHA2L1B10	Charmond on base 100 cm	Chrome	2,4	24	-

Contact us for:
Customization & connectivity

CHARMOND ON BASE

GROUND & POLE

CODE	TYPE	FINISH	WATT	VOLT	FITTING
CHA001B51	Charmond on base 50 cm	Bronze	4	12	G4
CHA001B75	Charmond on base 75 cm	Bronze	4	12	G4
CHA001B10	Charmond on base 100 cm	Bronze	4	12	G4
CHA101B51	Charmond on base 50 cm	Brushed nickel	4	12	G4
CHA101B75	Charmond on base 75 cm	Brushed nickel	4	12	G4
CHA101B10	Charmond on base 100 cm	Brushed nickel	4	12	G4
CHA201B51	Charmond on base 50 cm	Chrome	4	12	G4
CHA201B75	Charmond on base 75 cm	Chrome	4	12	G4
CHA201B10	Charmond on base 100 cm	Chrome	4	12	G4

Contact us for:
Customization & connectivity

SCAN & DISCOVER
THE ADVANTAGE OF BRASS

GROUND & POLE I CHARMOND

OUTDOOR

Authentage Catalogus 2024 Authentage Katalogus 2024 Authentage Catalogue 2024 Authentage Katalog 2024 Authentage Verlichting Authentage Lighting Authentage éclairage Authentage Beleuchtung
Authentage Webshop Authentage Verlichting Authentage Armaturen Authentage Winkels Authentage Verkooppunten Authentage Verdelers Authentage Verdeelpunten Authentage België Authentage Nederland Authentage Vente en Ligne Authentage Boutique Vente en Ligne Authentage Luminaires Authentage éclairage
Authentage Revendeurs Authentage Points de vente Authentage Magasins Authentage Boutiques Authentage Points de distribution Authentage France Authentage Lighting Authentage Retailers Authentage Dealers Authentage Distributors Authentage Points of sale Authentage Resellers Authentage England
Authentage Beleuchtung Authent Beleuchtung Authentage Leuchten Authentage Händler Authentage Shops Authentage Verkaufsstellen Authentage Vertriebspartner Authentage Deutschland Authentage E-shop Authentage Geschäfte Authentage Vertriebsstellen

www.Bcosy.be - Waarschoot - België - Belgique - Belgium - Belgien tel 0032 (0) 9 378 24 30 Mail: info@bcosy.be



Available in 2 versions: integrated LED (2200K) or retrofit bulb (G4).
Possible to integrate entrance fade dimming, enabling 2 levels of light intensity.
Lamps (G4 version) not included, consult light source guide for our advice.



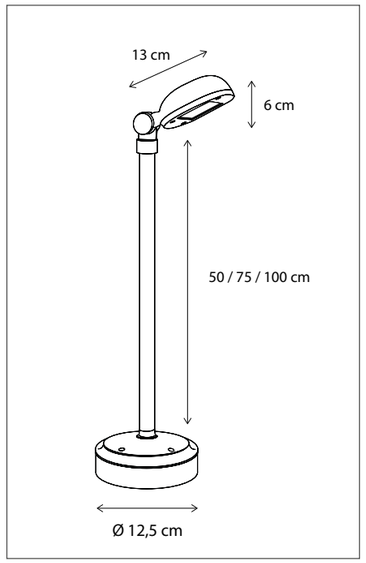

CODE	TYPE	FINISH	WATT	VOLT	FITTING
CHA0L1D51	Charmond on driver base 50 cm	Bronze	2,4	230	-
CHA0L1D75	Charmond on driver base 75 cm	Bronze	2,4	230	-
CHA0L1D10	Charmond on driver base 100 cm	Bronze	2,4	230	-
CHA1L1D51	Charmond on driver base 50 cm	Brushed nickel	2,4	230	-
CHA1L1D75	Charmond on driver base 75 cm	Brushed nickel	2,4	230	-
CHA1L1D10	Charmond on driver base 100 cm	Brushed nickel	2,4	230	-
CHA2L1D51	Charmond on driver base 50 cm	Chrome	2,4	230	-
CHA2L1D75	Charmond on driver base 75 cm	Chrome	2,4	230	-
CHA2L1D10	Charmond on driver base 100 cm	Chrome	2,4	230	-

Contact us for:
Customization & connectivity

CHARMOND ON
DRIVER BASE

GROUND & POLE

CODE	TYPE	FINISH	WATT	VOLT	FITTING
CHA001T51	Charmond on driver base 50 cm	Bronze	4	230	G4
CHA001T75	Charmond on driver base 75 cm	Bronze	4	230	G4
CHA001T10	Charmond on driver base 100 cm	Bronze	4	230	G4
CHA101T51	Charmond on driver base 50 cm	Brushed nickel	4	230	G4
CHA101T75	Charmond on driver base 75 cm	Brushed nickel	4	230	G4
CHA101T10	Charmond on driver base 100 cm	Brushed nickel	4	230	G4
CHA201T51	Charmond on driver base 50 cm	Chrome	4	230	G4
CHA201T75	Charmond on driver base 75 cm	Chrome	4	230	G4
CHA201T10	Charmond on driver base 100 cm	Chrome	4	230	G4

Contact us for:
Customization & connectivity

SCAN & DISCOVER
THE ADVANTAGE OF BRASS

GROUND & POLE I CHARMOND
OUTDOOR

Authentage Catalogus 2024 Authentage Katalogus 2024 Authentage Catalogue 2024 Authentage Katalog 2024 Authentage Verlichting Authentage Lighting Authentage éclairage Authentage Beleuchtung
Authentage Webshop Authentage Verlichting Authentage Armaturen Authentage Winkels Authentage Verkooppunten Authentage Verdelers Authentage Verdeelpunten Authentage België Authentage Nederland Authentage Vente en Ligne Authentage Boutique Vente en Ligne Authentage Luminaires Authentage éclairage
Authentage Revendeurs Authentage Points de vente Authentage Magasins Authentage Boutiques Authentage Points de distribution Authentage France Authentage Lighting Authentage Retailers Authentage Dealers Authentage Distributors Authentage Points of sale Authentage Resellers Authentage England
Authentage Beleuchtung Authent Beleuchtung Authentage Leuchten Authentage Händler Authentage Shops Authentage Verkaufsstellen Authentage Vertriebspartner Authentage Deutschland Authentage E-shop Authentage Geschäfte Authentage Vertriebsstellen

www.Bcosy.be - Waarschoot - België - Belgique - Belgium - Belgien tel 0032 (0) 9 378 24 30 Mail: info@bcosy.be

GALED 90°

GROUND & POLE

Select the correct driver, see p486 accessories.
Integrated LED 2700K.



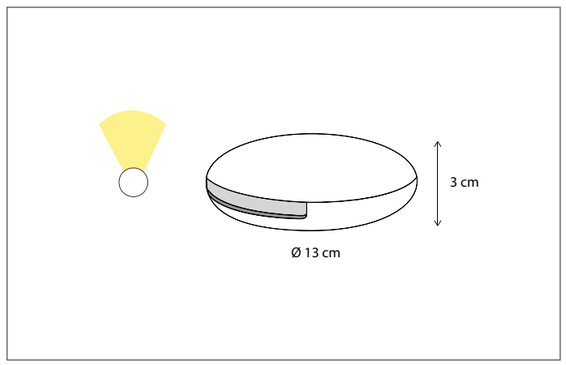

CODE	TYPE	FINISH	WATT	VOLT	FITTING
GAL001001	Galed 90°	Bronze	1,5	24	-
GAL101001	Galed 90°	Brushed nickel	1,5	24	-
GAL201001	Galed 90°	Chrome	1,5	24	-

GALED 2 X 90°

GROUND & POLE

Select the correct driver, see p486 accessories.
Integrated LED 2700K.

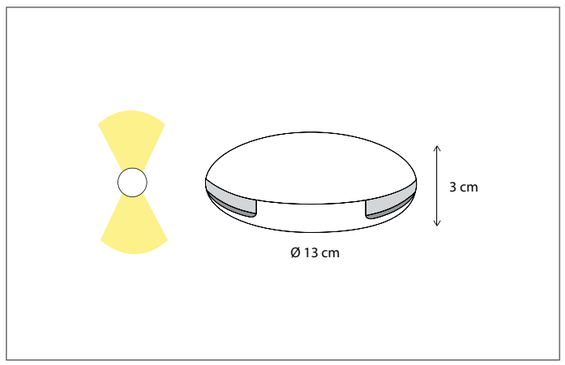



CODE	TYPE	FINISH	WATT	VOLT	FITTING
GAL002900	Galed 2 x 90°	Bronze	2 x 1,5	24	-
GAL102900	Galed 2 x 90°	Brushed nickel	2 x 1,5	24	-
GAL202900	Galed 2 x 90°	Chrome	2 x 1,5	24	-

SCAN & DISCOVER
THE ADVANTAGE OF BRASS

Contact us for:
Customization & connectivity

Contact us for:
Customization & connectivity

GROUND & POLE I GALED

OUTDOOR

Authentage Catalogus 2024 Authentage Katalogus 2024 Authentage Catalogue 2024 Authentage Katalog 2024 Authentage Verlichting Authentage Lighting Authentage éclairage Authentage Beleuchtung
Authentage Webshop Authentage Verlichting Authentage Armaturen Authentage Winkels Authentage Verkooppunten Authentage Verdelers Authentage Verdeelpunten Authentage België Authentage Nederland Authentage Vente en Ligne Authentage Boutique Vente en Ligne Authentage Luminaires Authentage éclairage
Authentage Revendeurs Authentage Points de vente Authentage Magasins Authentage Boutiques Authentage Points de distribution Authentage France Authentage Lighting Authentage Retailers Authentage Dealers Authentage Distributors Authentage Points of sale Authentage Resellers Authentage England
Authentage Beleuchtung Authent Beleuchtung Authentage Leuchten Authentage Händler Authentage Shops Authentage Verkaufsstellen Authentage Vertriebspartner Authentage Deutschland Authentage E-shop Authentage Geschäfte Authentage Vertriebsstellen

www.Bcosy.be - Waarschoot - België - Belgique - Belgium - Belgien tel 0032 (0) 9 378 24 30 Mail: info@bcosy.be

GALED 360°

GROUND & POLE

Select the correct driver, see p486 accessories.
Integrated LED 2700K.



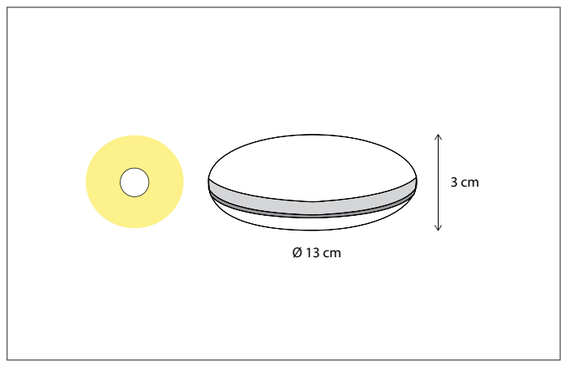

CODE	TYPE	FINISH	WATT	VOLT	FITTING
GAL003600	Galed 360°	Bronze	4,5	24	-
GAL103600	Galed 360°	Brushed nickel	4,5	24	-
GAL203600	Galed 360°	Chrome	4,5	24	-

GALED POLE 90°

GROUND & POLE

Available in 2 versions: driver included or excluded.
Select the correct driver, see p486 accessories.
Integrated LED 2700K.

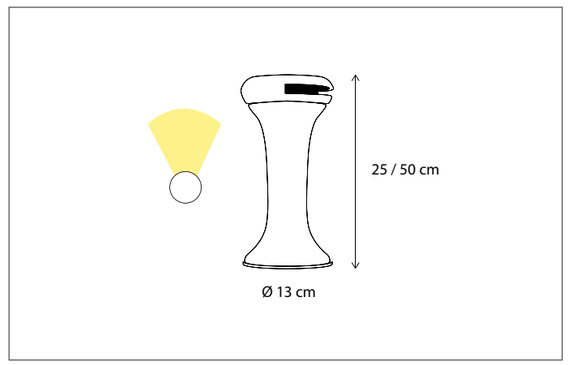



CODE	TYPE	FINISH	WATT	VOLT	FITTING
GAL0010P2	Galed pole 90° 25 cm (driver incl.)	Bronze	1,5	230	-
GAL0010P6	Galed pole 90° 50 cm (driver incl.)	Bronze	1,5	230	-
GAL1010P2	Galed pole 90° 25 cm (driver incl.)	Brushed nickel	1,5	230	-
GAL1010P6	Galed pole 90° 50 cm (driver incl.)	Brushed nickel	1,5	230	-
GAL2010P2	Galed pole 90° 25 cm (driver incl.)	Chrome	1,5	230	-
GAL2010P6	Galed pole 90° 50 cm (driver incl.)	Chrome	1,5	230	-
GAL0010PI	Galed pole 90° 25 cm	Bronze	1,5	24	-
GAL0010P5	Galed pole 90° 50 cm	Bronze	1,5	24	-
GAL1010PI	Galed pole 90° 25 cm	Brushed nickel	1,5	24	-
GAL1010P5	Galed pole 90° 50 cm	Brushed nickel	1,5	24	-
GAL2010PI	Galed pole 90° 25 cm	Chrome	1,5	24	-
GAL2010P5	Galed pole 90° 50 cm	Chrome	1,5	24	-

SCAN & DISCOVER
THE ADVANTAGE OF BRASS

Contact us for:
Customization & connectivity

Contact us for:
Customization & connectivity

GROUND & POLE I GALED

OUTDOOR

Authentage Catalogus 2024 Authentage Katalogus 2024 Authentage Catalogue 2024 Authentage Katalog 2024 Authentage Verlichting Authentage Lighting Authentage éclairage Authentage Beleuchtung
Authentage Webshop Authentage Verlichting Authentage Armaturen Authentage Winkels Authentage Verkooppunten Authentage Verdelers Authentage Verdeelpunten Authentage België Authentage Nederland Authentage Vente en Ligne Authentage Boutique Vente en Ligne Authentage Luminaires Authentage éclairage
Authentage Revendeurs Authentage Points de vente Authentage Magasins Authentage Boutiques Authentage Points de distribution Authentage France Authentage Lighting Authentage Retailers Authentage Dealers Authentage Distributors Authentage Points of sale Authentage Resellers Authentage England
Authentage Beleuchtung Authent Beleuchtung Authentage Leuchten Authentage Händler Authentage Shops Authentage Verkaufsstellen Authentage Vertriebspartner Authentage Deutschland Authentage E-shop Authentage Geschäfte Authentage Vertriebsstellen

www.Bcosy.be - Waarschoot - België - Belgique - Belgium - Belgien tel 0032 (0) 9 378 24 30 Mail: info@bcosy.be

GALED POLE 2 X 90°

GROUND & POLE

Available in 2 versions: driver included or excluded.
Select the correct driver, see p486 accessories.
Integrated LED 2700K.



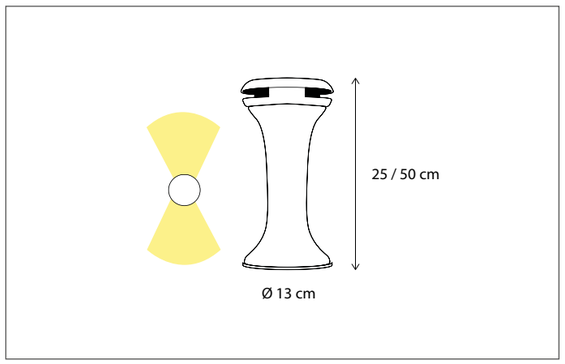

CODE	TYPE	FINISH	WATT	VOLT	FITTING
GAL0029P2	Galed pole 2 x 90° 25 cm (driver incl.)	Bronze	2 x 1,5	230	-
GAL0029P6	Galed pole 2 x 90° 50 cm (driver incl.)	Bronze	2 x 1,5	230	-
GAL1029P2	Galed pole 2 x 90° 25 cm (driver incl.)	Brushed nickel	2 x 1,5	230	-
GAL1029P6	Galed pole 2 x 90° 50 cm (driver incl.)	Brushed nickel	2 x 1,5	230	-
GAL2029P2	Galed pole 2 x 90° 25 cm (driver incl.)	Chrome	2 x 1,5	230	-
GAL2029P6	Galed pole 2 x 90° 50 cm (driver incl.)	Chrome	2 x 1,5	230	-
GAL0029PI	Galed pole 2 x 90° 25 cm	Bronze	2 x 1,5	24	-
GAL0029P5	Galed pole 2 x 90° 50 cm	Bronze	2 x 1,5	24	-
GAL1029PI	Galed pole 2 x 90° 25 cm	Brushed nickel	2 x 1,5	24	-
GAL1029P5	Galed pole 2 x 90° 50 cm	Brushed nickel	2 x 1,5	24	-
GAL2029PI	Galed pole 2 x 90° 25 cm	Chrome	2 x 1,5	24	-
GAL2029P5	Galed pole 2 x 90° 50 cm	Chrome	2 x 1,5	24	-

GALED POLE 360°

GROUND & POLE

Available in 2 versions: driver included or excluded.
Select the correct driver, see p486 accessories.
Integrated LED 2700K.



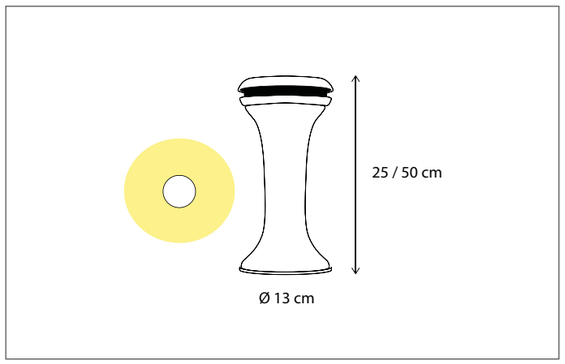

CODE	TYPE	FINISH	WATT	VOLT	FITTING
GAL0036P2	Galed pole 360° 25 cm (driver incl.)	Bronze	4,5	230	-
GAL0036P6	Galed pole 360° 50 cm (driver incl.)	Bronze	4,5	230	-
GAL1036P2	Galed pole 360° 25 cm (driver incl.)	Brushed nickel	4,5	230	-
GAL1036P6	Galed pole 360° 50 cm (driver incl.)	Brushed nickel	4,5	230	-
GAL2036P2	Galed pole 360° 25 cm (driver incl.)	Chrome	4,5	230	-
GAL2036P6	Galed pole 360° 50 cm (driver incl.)	Chrome	4,5	230	-
GAL0036PI	Galed pole 360° 25 cm	Bronze	4,5	24	-
GAL0036P5	Galed pole 360° 50 cm	Bronze	4,5	24	-
GAL1036PI	Galed pole 360° 25 cm	Brushed nickel	4,5	24	-
GAL1036P5	Galed pole 360° 50 cm	Brushed nickel	4,5	24	-
GAL2036PI	Galed pole 360° 25 cm	Chrome	4,5	24	-
GAL2036P5	Galed pole 360° 50 cm	Chrome	4,5	24	-

SCAN & DISCOVER
THE ADVANTAGE OF BRASS

Contact us for:
Customization & connectivity

Contact us for:
Customization & connectivity

GROUND & POLE I GALED

OUTDOOR

Authentage Catalogus 2024 Authentage Katalogus 2024 Authentage Catalogue 2024 Authentage Katalog 2024 Authentage Verlichting Authentage Lighting Authentage éclairage Authentage Beleuchtung
Authentage Webshop Authentage Verlichting Authentage Armaturen Authentage Winkels Authentage Verkooppunten Authentage Verdelers Authentage Verdeelpunten Authentage België Authentage Nederland Authentage Vente en Ligne Authentage Boutique Vente en Ligne Authentage Luminaires Authentage éclairage
Authentage Revendeurs Authentage Points de vente Authentage Magasins Authentage Boutiques Authentage Points de distribution Authentage France Authentage Lighting Authentage Retailers Authentage Dealers Authentage Lighting Distributors Authentage Points of sale Authentage Resellers Authentage England
Authentage Beleuchtung Authent Beleuchtung Authentage Leuchten Authentage Händler Authentage Shops Authentage Verkaufsstellen Authentage Vertriebspartner Authentage Deutschland Authentage E-shop Authentage Geschäfte Authentage Vertriebsstellen

www.Bcosy.be - Waarschoot - België - Belgique - Belgium - Belgien tel 0032 (0) 9 378 24 30 Mail: info@bcosy.be

Lamps not included, consult light source guide for our advice.

Lamps not included, consult light source guide for our advice.



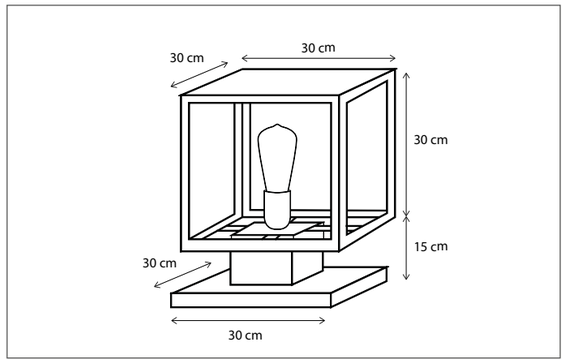

CODE	TYPE	FINISH	WATT	VOLT	FITTING
VIT001407	Vitrine pillar lantern	Bronze	15	230	E27
VIT101407	Vitrine pillar lantern	Brushed nickel	15	230	E27
VIT201407	Vitrine pillar lantern	Chrome	15	230	E27

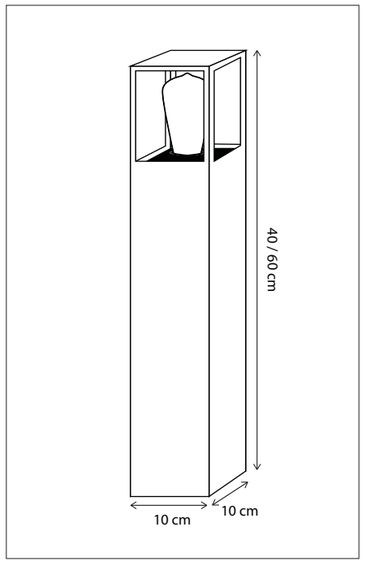



CODE	TYPE	FINISH	WATT	VOLT	FITTING
VIT001P40	Vitrine pole 40 cm	Bronze	15	230	E27
VIT001P60	Vitrine pole 60 cm	Bronze	15	230	E27
VIT101P40	Vitrine pole 40 cm	Brushed nickel	15	230	E27
VIT101P60	Vitrine pole 60 cm	Brushed nickel	15	230	E27
VIT201P40	Vitrine pole 40 cm	Chrome	15	230	E27
VIT201P60	Vitrine pole 60 cm	Chrome	15	230	E27

SCAN & DISCOVER
THE ADVANTAGE OF BRASS

Contact us for:
Customization & connectivity

Contact us for:
Customization & connectivity

GROUND & POLE I VITRINE

OUTDOOR

Authentage Catalogus 2024 Authentage Katalogus 2024 Authentage Catalogue 2024 Authentage Katalog 2024 Authentage Verlichting Authentage Lighting Authentage éclairage Authentage Beleuchtung
Authentage Webshop Authentage Verlichting Authentage Armaturen Authentage Winkels Authentage Verkooppunten Authentage Verdelers Authentage Verdeelpunten Authentage België Authentage Nederland Authentage Vente en Ligne Authentage Boutique Vente en Ligne Authentage Luminaires Authentage éclairage
Authentage Revendeurs Authentage Points de vente Authentage Magasins Authentage Boutiques Authentage Points de distribution Authentage France Authentage Lighting Authentage Retailers Authentage Dealers Authentage Distributors Authentage Points of sale Authentage Resellers Authentage England
Authentage Beleuchtung Authent Beleuchtung Authentage Leuchten Authentage Händler Authentage Shops Authentage Verkaufsstellen Authentage Vertriebspartner Authentage Deutschland Authentage E-shop Authentage Geschäfte Authentage Vertriebsstellen

www.Bcosy.be - Waarschoot - België - Belgique - Belgium - Belgien tel 0032 (0) 9 378 24 30 Mail: info@bcosy.be

GRACIEUZE BOTTOM PLATE SMALL/NORMAL

GROUND & POLE

An extra spot can be added in the ceiling of the normal variant (1L --> 2L).
Lamps not included, consult light source guide for our advice.



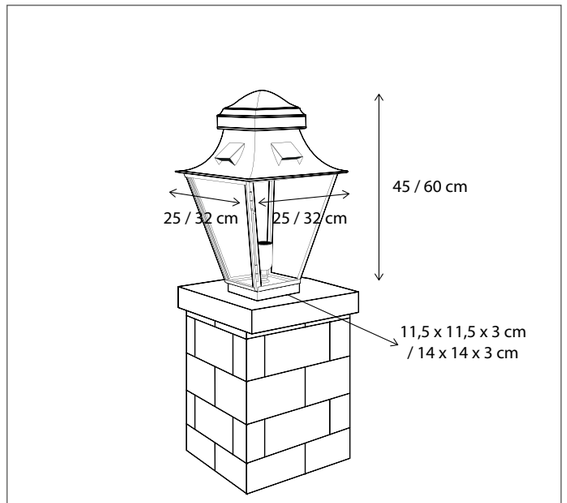

CODE	TYPE	FINISH	WATT	VOLT	FITTING
GRA001PM3	Gracieuze bottom plate small 1L	Bronze	15	230	E27
GRA001PM5	Gracieuze bottom plate normal 1L	Bronze	15	230	E27
GRA002PM5	Gracieuze bottom plate normal 2L	Bronze	15 + 8	230	E27 + GU10

GRACIEUZE BOTTOM PLATE GRAND

GROUND & POLE

4 extra GU10 spots can be added in the ceiling of the grand variant (4L --> 8L).
Lamps not included, consult light source guide for our advice.

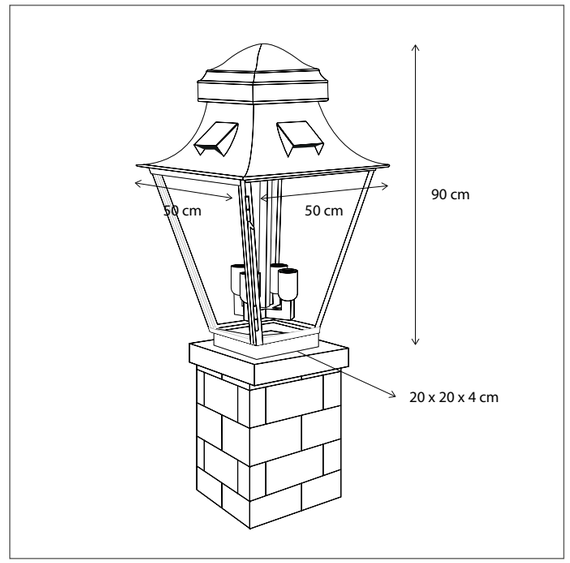



CODE	TYPE	FINISH	WATT	VOLT	FITTING
GRA004PM9	Gracieuze bottom plate grand 4L	Bronze	4 x 15	230	E27
GRA008PM9	Gracieuze bottom plate grand 8L	Bronze	4 x 15 + 4 x 8	230	E27 + GU10

SCAN & DISCOVER
THE ADVANTAGE OF BRASS

Contact us for:
Customization & connectivity

Contact us for:
Customization & connectivity

GROUND & POLE I GRACIEUZE

OUTDOOR

Authentage Catalogus 2024 Authentage Katalogus 2024 Authentage Catalogue 2024 Authentage Katalog 2024 Authentage Verlichting Authentage Lighting Authentage éclairage Authentage Beleuchtung
Authentage Webshop Authentage Verlichting Authentage Armaturen Authentage Winkels Authentage Verkooppunten Authentage Verdelers Authentage Verdeelpunten Authentage België Authentage Nederland Authentage Vente en Ligne Authentage Boutique Vente en Ligne Authentage Luminaires Authentage éclairage
Authentage Revendeurs Authentage Points de vente Authentage Magasins Authentage Boutiques Authentage Points de distribution Authentage France Authentage Lighting Authentage Retailers Authentage Dealers Authentage Distributors Authentage Points of sale Authentage Resellers Authentage England
Authentage Beleuchtung Authent Beleuchtung Authentage Leuchten Authentage Händler Authentage Shops Authentage Verkaufsstellen Authentage Vertriebspartner Authentage Deutschland Authentage E-shop Authentage Geschäfte Authentage Vertriebsstellen

www.Bcosy.be - Waarschoot - België - Belgique - Belgium - Belgien tel 0032 (0) 9 378 24 30 Mail: info@bcosy.be

GRACIEUZE ON FOOT SMALL/NORMAL

GROUND & POLE

An extra spot can be added in the ceiling of the normal variant (1L --> 2L).
Lamps not included, consult light source guide for our advice.



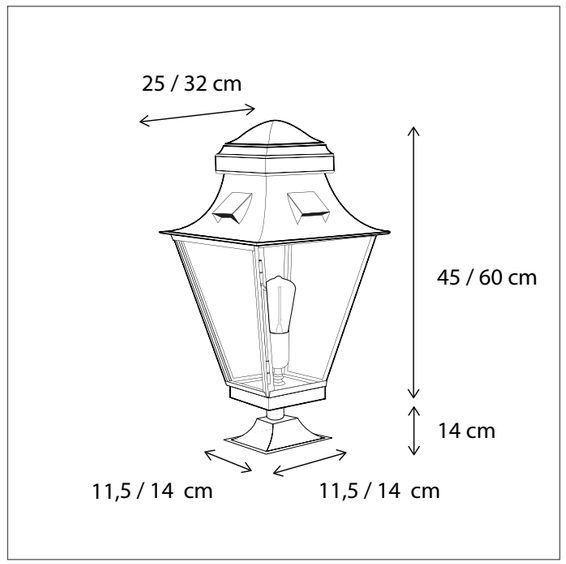

CODE	TYPE	FINISH	WATT	VOLT	FITTING
GRA001SM3	Gracieuze on foot small 1L	Bronze	15	230	E27
GRA001SM6	Gracieuze on foot normal 1L	Bronze	15	230	E27
GRA002SM6	Gracieuze on foot normal 2L	Bronze	15 + 8	230	E27 + GU10

GROUND & POLE I GRACIEUZE

OUTDOOR

SCAN & DISCOVER
THE ADVANTAGE OF BRASS

Contact us for:
Customization & connectivity

GRACIEUZE ON FOOT LARGE

GROUND & POLE

4 extra GU10 spots can be added in the ceiling of the grand variant (4L --> 8L).
Lamps not included, consult light source guide for our advice.

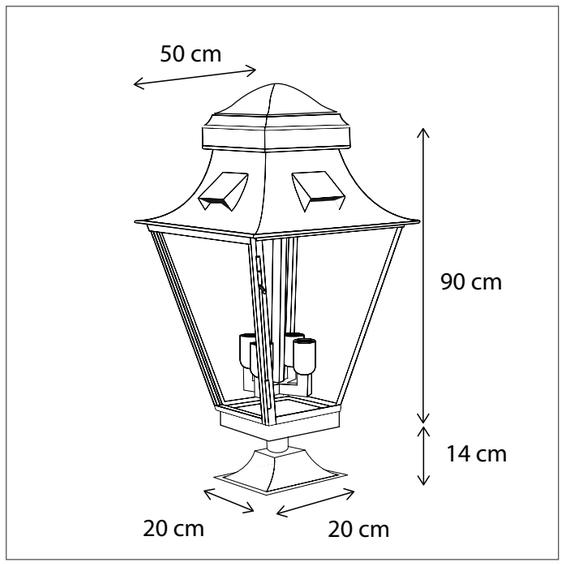



CODE	TYPE	FINISH	WATT	VOLT	FITTING
GRA004SM9	Gracieuze on foot large 4L	Bronze	4 x 15	230	E27
GRA008SM9	Gracieuze on foot large 8L	Bronze	4 x 15 + 4 x 8	230	E27 + GU10

Contact us for:
Customization & connectivity

GROUND & POLE I GRACIEUZE

OUTDOOR

Authentage Catalogus 2024 Authentage Katalogus 2024 Authentage Catalogue 2024 Authentage Katalog 2024 Authentage Verlichting Authentage Lighting Authentage éclairage Authentage Beleuchtung
Authentage Webshop Authentage Verlichting Authentage Armaturen Authentage Winkels Authentage Verkooppunten Authentage Verdelers Authentage Verdeelpunten Authentage België Authentage Nederland Authentage Vente en Ligne Authentage Boutique Vente en Ligne Authentage Luminaires Authentage éclairage
Authentage Revendeurs Authentage Points de vente Authentage Magasins Authentage Boutiques Authentage Points de distribution Authentage France Authentage Lighting Authentage Retailers Authentage Dealers Authentage Distributors Authentage Points of sale Authentage Resellers Authentage England
Authentage Beleuchtung Authent Beleuchtung Authentage Leuchten Authentage Händler Authentage Shops Authentage Verkaufsstellen Authentage Vertriebspartner Authentage Deutschland Authentage E-shop Authentage Geschäfte Authentage Vertriebsstellen

www.Bcosy.be - Waarschoot - België - Belgique - Belgium - Belgien tel 0032 (0) 9 378 24 30 Mail: info@bcosy.be

GRACIEUZE POLE SMALL/NORMAL

GROUND & POLE

An extra spot can be added in the ceiling of the normal variant (1L --> 2L).
Pole available on request.
Lamps not included, consult light source guide for our advice.



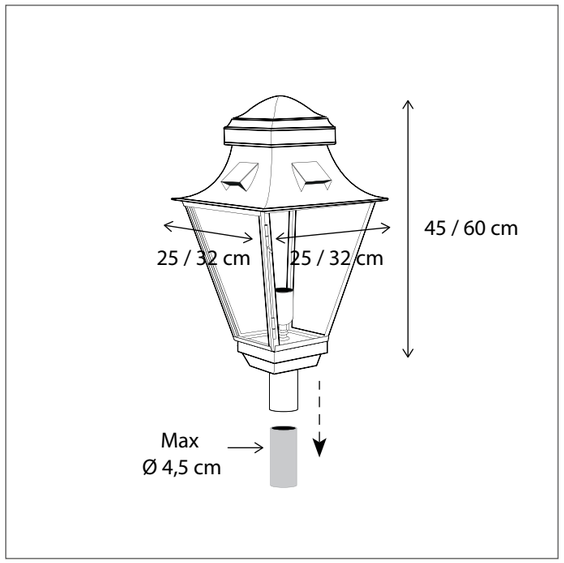

CODE	TYPE	FINISH	WATT	VOLT	FITTING
GRA001TM3	Gracieuze pole small 1L	Bronze	15	230	E27
GRA001TM5	Gracieuze pole normal 1L	Bronze	15	230	E27
GRA002TM5	Gracieuze pole normal 2L	Bronze	15 + 8	230	E27 + GU10

GRACIEUZE POLE GRAND

GROUND & POLE

4 extra GU10 spots can be added in the ceiling of the grand variant (4L --> 8L).
Lamps not included, consult light source guide for our advice.

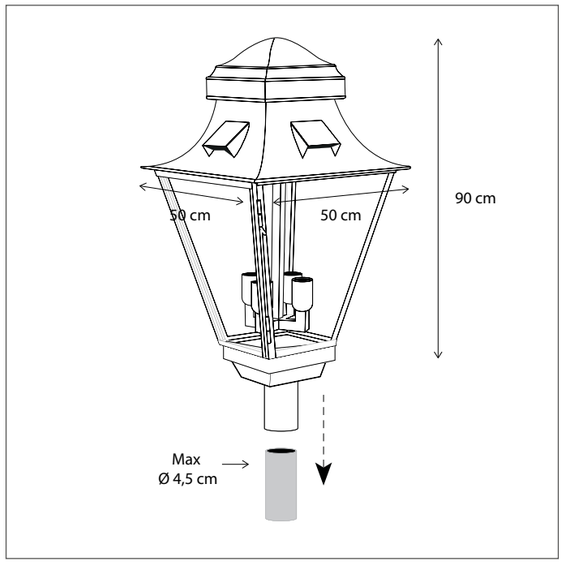



CODE	TYPE	FINISH	WATT	VOLT	FITTING
GRA004TM9	Gracieuze pole grand 4L	Bronze	4 x 15	230	E27
GRA008TM9	Gracieuze pole grand 8L	Bronze	4 x 15 + 4 x 8	230	E27 + GU10

SCAN & DISCOVER
THE ADVANTAGE OF BRASS

Contact us for:
Customization & connectivity

Contact us for:
Customization & connectivity

GROUND & POLE I GRACIEUZE

OUTDOOR

Authentage Catalogus 2024 Authentage Katalogus 2024 Authentage Catalogue 2024 Authentage Katalog 2024 Authentage Verlichting Authentage Lighting Authentage éclairage Authentage Beleuchtung
Authentage Webshop Authentage Verlichting Authentage Armaturen Authentage Winkels Authentage Verkooppunten Authentage Verdelers Authentage Verdeelpunten Authentage België Authentage Nederland Authentage Vente en Ligne Authentage Boutique Vente en Ligne Authentage Luminaires Authentage éclairage
Authentage Revendeurs Authentage Points de vente Authentage Magasins Authentage Boutiques Authentage Points de distribution Authentage France Authentage Lighting Authentage Retailers Authentage Dealers Authentage Distributors Authentage Points of sale Authentage Resellers Authentage England
Authentage Beleuchtung Authent Beleuchtung Authentage Leuchten Authentage Händler Authentage Shops Authentage Verkaufsstellen Authentage Vertriebspartner Authentage Deutschland Authentage E-shop Authentage Geschäfte Authentage Vertriebsstellen

www.Bcosy.be - Waarschoot - België - Belgique - Belgium - Belgien tel 0032 (0) 9 378 24 30 Mail: info@bcosy.be

BEAUTIQUE DECK

GROUND & POLE

ALB

GROUND & POLE

Lamps included.
Shade is made from Alabaster creating a beautiful light effect

436



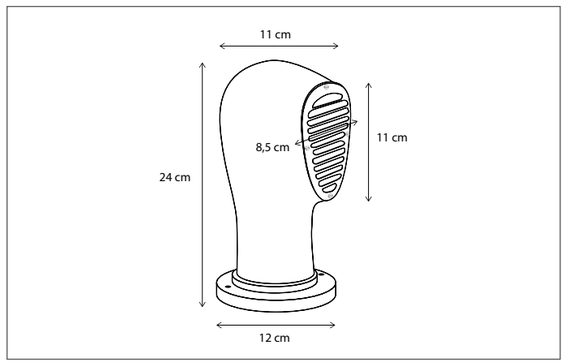

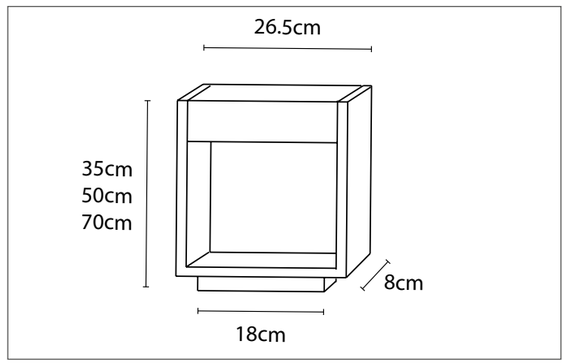



437

CODE	TYPE	FINISH	WATT	VOLT	FITTING
BED0L11DR	Beautique deck	Bronze	2 x 1,5	230	-
BED1L11DR	Beautique deck	Brushed nickel	2 x 1,5	230	-
BED2L11DR	Beautique deck	Chrome	2 x 1,5	230	-
BED3L11DR	Beautique deck	Polished brass	2 x 1,5	230	-

CODE	TYPE	FINISH	WATT	VOLT	FITTING
ALB001P35	Alb garden pole 35cm	Bronze	10	230	
ALB001P50	Alb garden pole 50cm	Bronze	10	230	
ALB001P70	Alb garden pole 70cm	Bronze	10	230	

OUTDOOR

SCAN & DISCOVER
THE ADVANTAGE OF BRASS

Contact us for:
Customization & connectivity

Contact us for:
Customization & connectivity

OUTDOOR

Authentage Catalogus 2024 Authentage Katalogus 2024 Authentage Catalogue 2024 Authentage Katalog 2024 Authentage Verlichting Authentage Lighting Authentage éclairage Authentage Beleuchtung
Authentage Webshop Authentage Verlichting Authentage Armaturen Authentage Winkels Authentage Verkooppunten Authentage Verdelers Authentage Verdeelpunten Authentage België Authentage Nederland Authentage Vente en Ligne Authentage Boutique Vente en Ligne Authentage Luminaires Authentage éclairage
Authentage Revendeurs Authentage Points de vente Authentage Magasins Authentage Boutiques Authentage Points de distribution Authentage France Authentage Lighting Authentage Retailers Authentage Dealers Authentage Distributors Authentage Points of sale Authentage Resellers Authentage England
Authentage Beleuchtung Authent Beleuchtung Authentage Leuchten Authentage Händler Authentage Shops Authentage Verkaufsstellen Authentage Vertriebspartner Authentage Deutschland Authentage E-shop Authentage Geschäfte Authentage Vertriebsstellen

www.Bcosy.be - Waarschoot - België - Belgique - Belgium - Belgien tel 0032 (0) 9 378 24 30 Mail: info@bcosy.be

Recessed

OUTDOOR



CATALOGUE I OUTDOOR I RECESSED

Authentage Catalogus 2024 Authentage Katalogus 2024 Authentage Catalogue 2024 Authentage Katalog 2024 Authentage Verlichting Authentage Lighting Authentage éclairage Authentage Beleuchtung
Authentage Webshop Authentage Verlichting Authentage Armaturen Authentage Winkels Authentage Verkooppunten Authentage Verdelers Authentage Verdeelpunten Authentage België Authentage Nederland Authentage Vente en Ligne Authentage Boutique Vente en Ligne Authentage Luminaires Authentage éclairage
Authentage Revendeurs Authentage Points de vente Authentage Magasins Authentage Boutiques Authentage Points de distribution Authentage France Authentage Lighting Authentage Retailers Authentage Dealers Authentage Distributors Authentage Points of sale Authentage Resellers Authentage England
Authentage Beleuchtung Authent Beleuchtung Authentage Leuchten Authentage Händler Authentage Shops Authentage Verkaufsstellen Authentage Vertriebspartner Authentage Deutschland Authentage E-shop Authentage Geschäfte Authentage Vertriebsstellen

www.Bcosy.be - Waarschoot - België - Belgique - Belgium - Belgien tel 0032 (0) 9 378 24 30 Mail: info@bcosy.be

SUBTILE PETITE

RECESSED

IP 66

Available with clear glass or Kelvin Killer glass (warmer light).
Select the correct driver, see p486 accessories.
Lamps not included, consult light source guide for our advice.



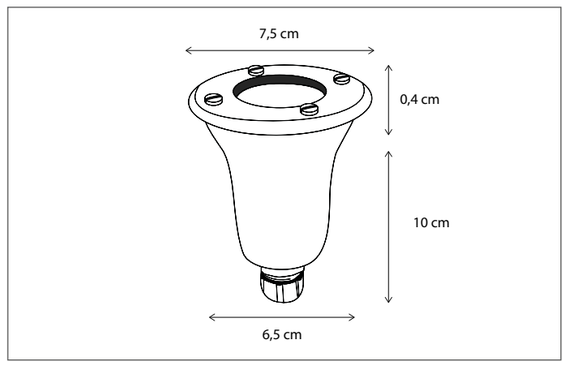

SUBTILE

RECESSED

IP 66 DALI

Available with clear glass or Kelvin Killer glass (warmer light)
Select the correct driver, see p486 accessories.
Lamps not included, consult light source guide for our advice.

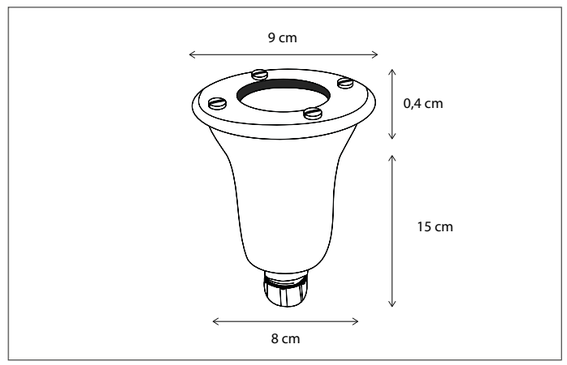



CODE	TYPE	FINISH	WATT	VOLT	FITTING
SUB001C10	Subtile petite clear glass	Bronze	4	12	G4
SUB001K10	Subtile petite kelvin killer glass	Bronze	4	12	G4
SUB101C10	Subtile petite clear glass	Brushed nickel	4	12	G4
SUB101K10	Subtile petite kelvin killer glass	Brushed nickel	4	12	G4
SUB201C10	Subtile petite clear glass	Chrome	4	12	G4
SUB201K10	Subtile petite kelvin killer glass	Chrome	4	12	G4

CODE	TYPE	FINISH	WATT	VOLT	FITTING
SUB001C15	Subtile clear glass	Bronze	6	12	G5,3
SUB001K15	Subtile kelvin killer glass	Bronze	6	12	G5,3
SUB101C15	Subtile clear glass	Brushed nickel	6	12	G5,3
SUB101K15	Subtile kelvin killer glass	Brushed nickel	6	12	G5,3
SUB201C15	Subtile clear glass	Chrome	6	12	G5,3
SUB201K15	Subtile kelvin killer glass	Chrome	6	12	G5,3

SCAN & DISCOVER
THE ADVANTAGE OF BRASS

Contact us for:
Customization & connectivity

Contact us for:
Customization & connectivity

RECESSED I SUBTILE

OUTDOOR

Authentage Catalogus 2024 Authentage Katalogus 2024 Authentage Catalogue 2024 Authentage Katalog 2024 Authentage Verlichting Authentage Lighting Authentage éclairage Authentage Beleuchtung
Authentage Webshop Authentage Verlichting Authentage Armaturen Authentage Winkels Authentage Verkooppunten Authentage Verdelers Authentage Verdeelpunten Authentage België Authentage Nederland Authentage Vente en Ligne Authentage Boutique Vente en Ligne Authentage Luminaires Authentage éclairage
Authentage Revendeurs Authentage Points de vente Authentage Magasins Authentage Boutiques Authentage Points de distribution Authentage France Authentage Lighting Authentage Retailers Authentage Dealers Authentage Distributors Authentage Points of sale Authentage Resellers Authentage England
Authentage Beleuchtung Authent Beleuchtung Authentage Leuchten Authentage Händler Authentage Shops Authentage Verkaufsstellen Authentage Vertriebspartner Authentage Deutschland Authentage E-shop Authentage Geschäfte Authentage Vertriebsstellen

www.Bcosy.be - Waarschoot - België - Belgique - Belgium - Belgien tel 0032 (0) 9 378 24 30 Mail: info@bcosy.be

Floor & Table

OUTDOOR

BELLEFEU® 446

BELLEFEU® ON BATTERY 449

VITRINE 450

MICRO 452

MACRO 454

GRACIEUZE 455



CATALOGUE I OUTDOOR I FLOOR & TABLE

Authentage Catalogus 2024 Authentage Katalogus 2024 Authentage Catalogue 2024 Authentage Katalog 2024 Authentage Verlichting Authentage Lighting Authentage éclairage Authentage Beleuchtung
Authentage Webshop Authentage Verlichting Authentage Armaturen Authentage Winkels Authentage Verkooppunten Authentage Verdelers Authentage Verdeelpunten Authentage België Authentage Nederland Authentage Vente en Ligne Authentage Boutique Vente en Ligne Authentage Luminaires Authentage éclairage
Authentage Revendeurs Authentage Points de vente Authentage Magasins Authentage Boutiques Authentage Points de distribution Authentage France Authentage Lighting Authentage Retailers Authentage Dealers Authentage Distributors Authentage Points of sale Authentage Resellers Authentage England
Authentage Beleuchtung Authent Beleuchtung Authentage Leuchten Authentage Händler Authentage Shops Authentage Verkaufsstellen Authentage Vertriebspartner Authentage Deutschland Authentage E-shop Authentage Geschäfte Authentage Vertriebsstellen

www.Bcosy.be - Waarschoot - België - Belgique - Belgium - Belgien tel 0032 (0) 9 378 24 30 Mail: info@bcosy.be

BELLEFEU® GRACIEUZE

FLOOR & TABLE

IP 43 DI

Integrated push dimmer for adjustable candle effect.

For control/connectivity options, see p494 accessories.



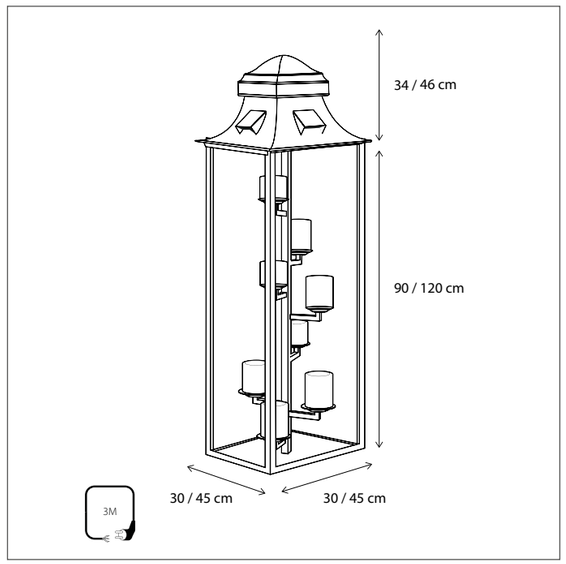

CODE	TYPE	FINISH	WATT	VOLT	FITTING
BGH008GIP	Bellefeu® gracieuze high - 8 candles glass	Bronze	8 x 2,4	230	-
BGH014GIP	Bellefeu® gracieuze high - 14 candles glass	Bronze	14 x 2,4	230	-
BGHA08GIP	Bellefeu® gracieuze high - 8 candles alabaster	Bronze	8 x 2,4	230	-
BGHA14GIP	Bellefeu® gracieuze high - 14 candles alabaster	Bronze	14 x 2,4	230	-

Contact us for:

Customization & connectivity

BELLEFEU® VITRINE

FLOOR & TABLE

IP 43 DI

Integrated push dimmer for adjustable candle effect.

For control/connectivity options, see p494 accessories.

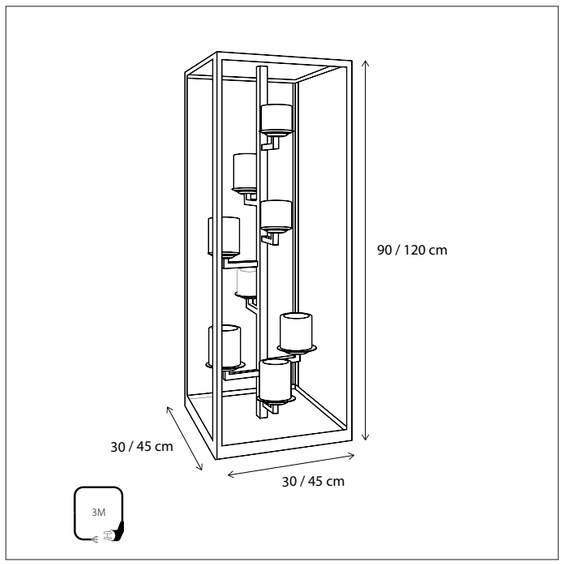



CODE	TYPE	FINISH	WATT	VOLT	FITTING
BVH008GIP	Bellefeu® vitrine high - 8 candles glass	Bronze	8 x 2,4	230	-
BVH014GIP	Bellefeu® vitrine high - 14 candles glass	Bronze	14 x 2,4	230	-
BVHA08GIP	Bellefeu® vitrine high - 8 candles alabaster	Bronze	8 x 2,4	230	-
BVHA14GIP	Bellefeu® vitrine high - 14 candles alabaster	Bronze	14 x 2,4	230	-

Contact us for:

Customization & connectivity

SCAN & DISCOVER

THE BELLEFEU EFFECT

Authentage Catalogus 2024 Authentage Katalogus 2024 Authentage Catalogue 2024 Authentage Katalog 2024 Authentage Verlichting Authentage Lighting Authentage éclairage Authentage Beleuchtung
Authentage Webshop Authentage Verlichting Authentage Armaturen Authentage Winkels Authentage Verkooppunten Authentage Verdelers Authentage Verdeelpunten Authentage België Authentage Nederland Authentage Vente en Ligne Authentage Boutique Vente en Ligne Authentage Luminaires Authentage éclairage
Authentage Revendeurs Authentage Points de vente Authentage Magasins Authentage Boutiques Authentage Points de distribution Authentage France Authentage Lighting Authentage Retailers Authentage Dealers Authentage Distributors Authentage Points of sale Authentage Resellers Authentage England
Authentage Beleuchtung Authent Beleuchtung Authentage Leuchten Authentage Händler Authentage Shops Authentage Verkaufsstellen Authentage Vertriebspartner Authentage Deutschland Authentage E-shop Authentage Geschäfte Authentage Vertriebsstellen

www.Bcosy.be - Waarschoot - België - Belgique - Belgium - Belgien tel 0032 (0) 9 378 24 30 Mail: info@bcosy.be

BELLEFEU® VITRINE LANTERN

FLOOR & TABLE

Integrated push dimmer for adjustable candle effect.

For control/connectivity options, see p494 accessories.



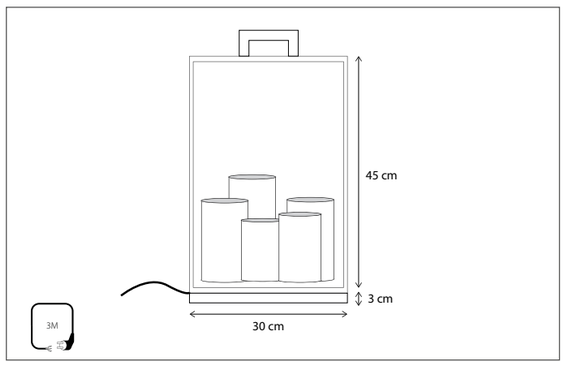

CODE	TYPE	FINISH	WATT	VOLT	FITTING
BVO005D53	Bellefeu® vitrine lantern outdoor - 5 candles glass	Bronze	5 x 2,4	230	-
BAO005D53	Bellefeu® vitrine lantern outdoor - 5 candles alabaster	Bronze	5 x 2,4	230	-

Contact us for:

Customization & connectivity

BELLEFEU® ON BATTERY

FLOOR & TABLE

Charging Li-Ion battery takes 3 hours.
Autonomy of the lamp is 8 hours in maximum mode.
AC/DC charger with plug connector is included.
Charge lamp indoors only.

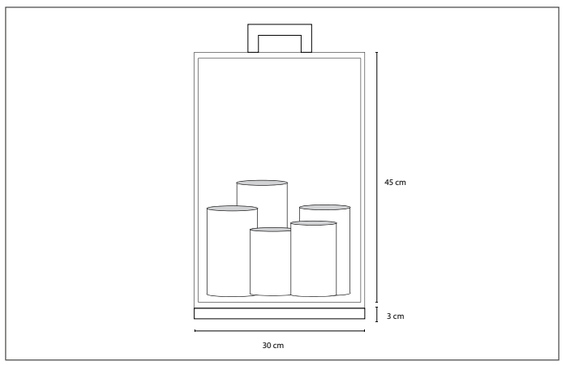



CODE	TYPE	FINISH	WATT	VOLT	FITTING
BVO005A53	Bellefeu® on battery outdoor - 5 candles glass	Bronze	5 x 2,4	230-24	
BAO005A53	Bellefeu® on battery outdoor - 5 candles alabaster	Bronze	5 x 2,4	230-24	-

Contact us for:

Customization & connectivity

SCAN & DISCOVER

THE BELLEFEU EFFECT

FLOOR & TABLE I BELLEFEU®
OUTDOOR

Authentage Catalogus 2024 Authentage Katalogus 2024 Authentage Catalogue 2024 Authentage Katalog 2024 Authentage Verlichting Authentage Lighting Authentage éclairage Authentage Beleuchtung
Authentage Webshop Authentage Verlichting Authentage Armaturen Authentage Winkels Authentage Verkooppunten Authentage Verdelers Authentage Verdeelpunten Authentage België Authentage Nederland Authentage Vente en Ligne Authentage Boutique Vente en Ligne Authentage Luminaires Authentage éclairage
Authentage Revendeurs Authentage Points de vente Authentage Magasins Authentage Boutiques Authentage Points de distribution Authentage France Authentage Lighting Authentage Retailers Authentage Dealers Authentage Distributors Authentage Points of sale Authentage Resellers Authentage England
Authentage Beleuchtung Authent Beleuchtung Authentage Leuchten Authentage Händler Authentage Shops Authentage Verkaufsstellen Authentage Vertriebspartner Authentage Deutschland Authentage E-shop Authentage Geschäfte Authentage Vertriebsstellen

www.Bcosy.be - Waarschoot - België - Belgique - Belgium - Belgien tel 0032 (0) 9 378 24 30 Mail: info@bcosy.be

VITRINE TABLE

FLOOR & TABLE

IP 43

Lamps not included, consult light source guide for our advice.



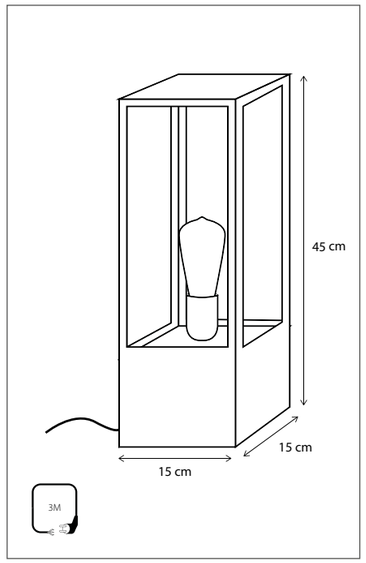

CODE	TYPE	FINISH	WATT	VOLT	FITTING
VIT001442	Vitrine table outdoor	Bronze	15	230	E27
VIT101442	Vitrine table outdoor	Brushed nickel	15	230	E27
VIT201442	Vitrine table outdoor	Chrome	15	230	E27

VITRINE TABLE LANTERN

FLOOR & TABLE

IP 43

Lamps not included, consult light source guide for our advice.

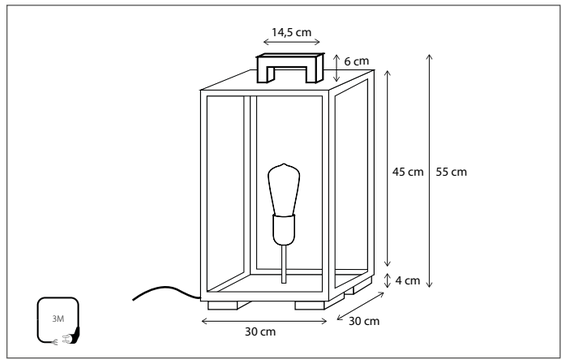



CODE	TYPE	FINISH	WATT	VOLT	FITTING
VIT001408	Vitrine table lantern outdoor	Bronze	15	230	E27
VIT101408	Vitrine table lantern outdoor	Brushed nickel	15	230	E27
VIT201408	Vitrine table lantern outdoor	Chrome	15	230	E27

SCAN & DISCOVER
THE ADVANTAGE OF BRASS

Contact us for:
Customization & connectivity

Contact us for:
Customization & connectivity

FLOOR & TABLE I VITRINE

OUTDOOR

Authentage Catalogus 2024 Authentage Katalogus 2024 Authentage Catalogue 2024 Authentage Katalog 2024 Authentage Verlichting Authentage Lighting Authentage éclairage Authentage Beleuchtung
Authentage Webshop Authentage Verlichting Authentage Armaturen Authentage Winkels Authentage Verkooppunten Authentage Verdelers Authentage Verdeelpunten Authentage België Authentage Nederland Authentage Vente en Ligne Authentage Boutique Vente en Ligne Authentage Luminaires Authentage éclairage
Authentage Revendeurs Authentage Points de vente Authentage Magasins Authentage Boutiques Authentage Points de distribution Authentage France Authentage Lighting Authentage Retailers Authentage Dealers Authentage Distributors Authentage Points of sale Authentage Resellers Authentage England
Authentage Beleuchtung Authent Beleuchtung Authentage Leuchten Authentage Händler Authentage Shops Authentage Verkaufsstellen Authentage Vertriebspartner Authentage Deutschland Authentage E-shop Authentage Geschäfte Authentage Vertriebsstellen

www.Bcosy.be - Waarschoot - België - Belgique - Belgium - Belgien tel 0032 (0) 9 378 24 30 Mail: info@bcosy.be

MICRO FLOOR

FLOOR & TABLE

IP 55

For warmer light, add Kelvin Killer® see p474.
For enhanced light dispersion or anti-glare effect, add frosted glass filter see p474.
Lamps not included, consult light source guide for our advice.



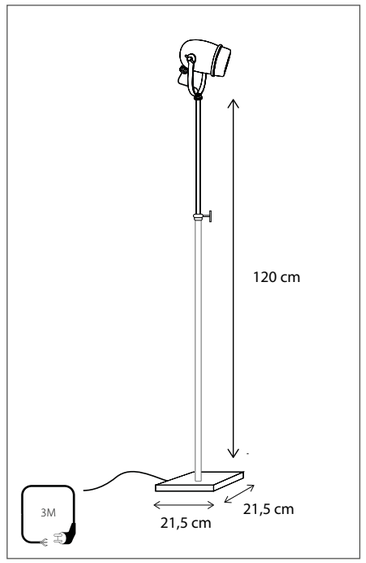

CODE	TYPE	FINISH	WATT	VOLT	FITTING
MIC001007	Micro floor outdoor	Bronze	6	230	GU10
MIC101007	Micro floor outdoor	Brushed nickel	6	230	GU10
MIC201007	Micro floor outdoor	Chrome	6	230	GU10

Contact us for:
Customization & connectivity

MICRO TRIPOD

FLOOR & TABLE

IP 55

For warmer light, add Kelvin Killer® see p474.
For enhanced light dispersion or anti-glare effect, add frosted glass filter see p474.
Lamps not included, consult light source guide for our advice.

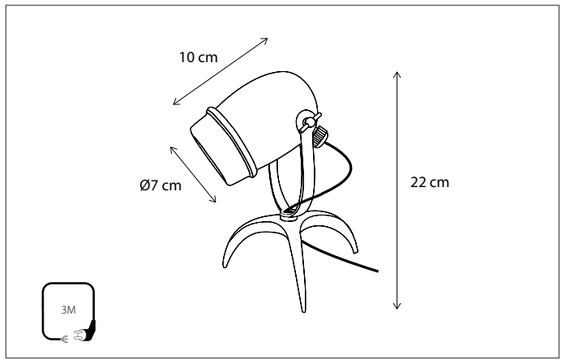



CODE	TYPE	FINISH	WATT	VOLT	FITTING
MIC001TRO	Micro tripod outdoor	Bronze	6	230	GU10
MIC101TRO	Micro tripod outdoor	Brushed nickel	6	230	GU10
MIC201TRO	Micro tripod outdoor	Chrome	6	230	GU10

Contact us for:
Customization & connectivity

SCAN & DISCOVER
THE ADVANTAGE OF BRASS

FLOOR & TABLE I MICRO
OUTDOOR

Authentage Catalogus 2024 Authentage Katalogus 2024 Authentage Catalogue 2024 Authentage Katalog 2024 Authentage Verlichting Authentage Lighting Authentage éclairage Authentage Beleuchtung
Authentage Webshop Authentage Verlichting Authentage Armaturen Authentage Winkels Authentage Verkooppunten Authentage Verdelers Authentage Verdeelpunten Authentage België Authentage Nederland Authentage Vente en Ligne Authentage Boutique Vente en Ligne Authentage Luminaires Authentage éclairage
Authentage Revendeurs Authentage Points de vente Authentage Magasins Authentage Boutiques Authentage Points de distribution Authentage France Authentage Lighting Authentage Retailers Authentage Dealers Authentage Distributors Authentage Points of sale Authentage Resellers Authentage England
Authentage Beleuchtung Authent Beleuchtung Authentage Leuchten Authentage Händler Authentage Shops Authentage Verkaufsstellen Authentage Vertriebspartner Authentage Deutschland Authentage E-shop Authentage Geschäfte Authentage Vertriebsstellen

www.Bcosy.be - Waarschoot - België - Belgique - Belgium - Belgien tel 0032 (0) 9 378 24 30 Mail: info@bcosy.be

MACRO FLOOR

FLOOR & TABLE

IP 55

For warmer light, add Kelvin Killer® see p474.
Lamps not included, consult light source guide for our advice.



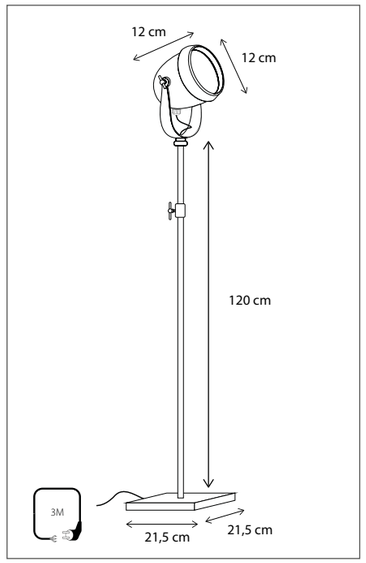

CODE	TYPE	FINISH	WATT	VOLT	FITTING
MAC001FLU	Macro floor outdoor	Bronze	12	230	G53
MAC101FLU	Macro floor outdoor	Brushed nickel	12	230	G53
MAC201FLU	Macro floor outdoor	Chrome	12	230	G53

GRACIEUZE TERRACE SMALL/NORMAL

FLOOR &TABLE

IP 43

An extra spot can be added in the ceiling of the normal variant (1L --> 2L).
Lamps not included, consult light source guide for our advice.

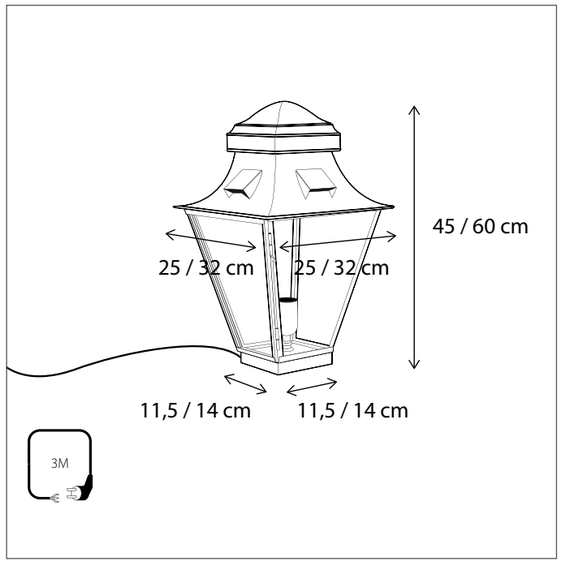



CODE	TYPE	FINISH	WATT	VOLT	FITTING
GRA001TE3	Gracieuze terrace small 1L	Bronze	15	230	E27
GRA001TE5	Gracieuze terrace normal 1L	Bronze	15	230	E27
GRA002TE5	Gracieuze terrace normal 2L	Bronze	15 + 8	230	E27 + GU10

OUTDOOR

SCAN & DISCOVER
THE ADVANTAGE OF BRASS

Contact us for:
Customization & connectivity

Contact us for:
Customization & connectivity

Authentage Catalogus 2024 Authentage Katalogus 2024 Authentage Catalogue 2024 Authentage Katalog 2024 Authentage Verlichting Authentage Lighting Authentage éclairage Authentage Beleuchtung
Authentage Webshop Authentage Verlichting Authentage Armaturen Authentage Winkels Authentage Verkooppunten Authentage Verdelers Authentage Verdeelpunten Authentage België Authentage Nederland Authentage Vente en Ligne Authentage Boutique Vente en Ligne Authentage Luminaires Authentage éclairage
Authentage Revendeurs Authentage Points de vente Authentage Magasins Authentage Boutiques Authentage Points de distribution Authentage France Authentage Lighting Authentage Retailers Authentage Dealers Authentage Distributors Authentage Points of sale Authentage Resellers Authentage England
Authentage Beleuchtung Authent Beleuchtung Authentage Leuchten Authentage Händler Authentage Shops Authentage Verkaufsstellen Authentage Vertriebspartner Authentage Deutschland Authentage E-shop Authentage Geschäfte Authentage Vertriebsstellen

www.Bcosy.be - Waarschoot - België - Belgique - Belgium - Belgien tel 0032 (0) 9 378 24 30 Mail: info@bcosy.be

GRACIEUZE
TERRACE GRAND

FLOOR & TABLE

IP 43

4 extra GU10 spots can be added in the ceiling of the grand variant (4L --> 8L).
Lamps not included, consult light source guide for our advice.



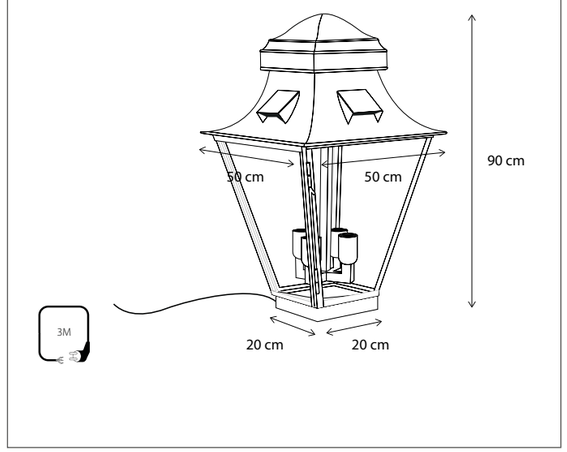

CODE	TYPE	FINISH	WATT	VOLT	FITTING
GRA004TE9	Gracieuze terrace grand 4L	Bronze	4 x 15	230	E27
GRA008TE9	Gracieuze terrace grand 8L	Bronze	4 x 15 + 4 x 8	230	E27 + GU10

OUTDOOR

SCAN & DISCOVER
THE ADVANTAGE OF BRASS

Contact us for:
Customization & connectivity



Authentage Catalogus 2024 Authentage Katalogus 2024 Authentage Catalogue 2024 Authentage Katalog 2024 Authentage Verlichting Authentage Lighting Authentage éclairage Authentage Beleuchtung
Authentage Webshop Authentage Verlichting Authentage Armaturen Authentage Winkels Authentage Verkooppunten Authentage Verdelers Authentage Verdeelpunten Authentage België Authentage Nederland Authentage Vente en Ligne Authentage Boutique Vente en Ligne Authentage Luminaires Authentage éclairage
Authentage Revendeurs Authentage Points de vente Authentage Magasins Authentage Boutiques Authentage Points de distribution Authentage France Authentage Lighting Authentage Retailers Authentage Dealers Authentage Distributors Authentage Points of sale Authentage Resellers Authentage England
Authentage Beleuchtung Authent Beleuchtung Authentage Leuchten Authentage Händler Authentage Shops Authentage Verkaufsstellen Authentage Vertriebspartner Authentage Deutschland Authentage E-shop Authentage Geschäfte Authentage Vertriebsstellen

www.Bcosy.be - Waarschoot - België - Belgique - Belgium - Belgien tel 0032 (0) 9 378 24 30 Mail: info@bcosy.be

BELLEFEU® 460
GRACIEUZE 462
ELEBASE 465
ELEGANCE 467

Suspension

OUTDOOR



CATALOGUE I OUTDOOR I SUSPENSION

Authentage Catalogus 2024 Authentage Katalogus 2024 Authentage Catalogue 2024 Authentage Katalog 2024 Authentage Verlichting Authentage Lighting Authentage éclairage Authentage Beleuchtung
Authentage Webshop Authentage Verlichting Authentage Armaturen Authentage Winkels Authentage Verkooppunten Authentage Verdelers Authentage Verdeelpunten Authentage België Authentage Nederland Authentage Vente en Ligne Authentage Boutique Vente en Ligne Authentage Luminaires Authentage éclairage
Authentage Revendeurs Authentage Points de vente Authentage Magasins Authentage Boutiques Authentage Points de distribution Authentage France Authentage Lighting Authentage Retailers Authentage Dealers Authentage Distributors Authentage Points of sale Authentage Resellers Authentage England
Authentage Beleuchtung Authent Beleuchtung Authentage Leuchten Authentage Händler Authentage Shops Authentage Verkaufsstellen Authentage Vertriebspartner Authentage Deutschland Authentage E-shop Authentage Geschäfte Authentage Vertriebsstellen

www.Bcosy.be - Waarschoot - België - Belgique - Belgium - Belgien tel 0032 (0) 9 378 24 30 Mail: info@bcosy.be

BELLEFEU VITRINE LANTERN

SUSPENSION

IP 20

Integrated push dimmer for adjustable candle effect.
Sheltered installation required.

For control/connectivity options, see p494 accessories.



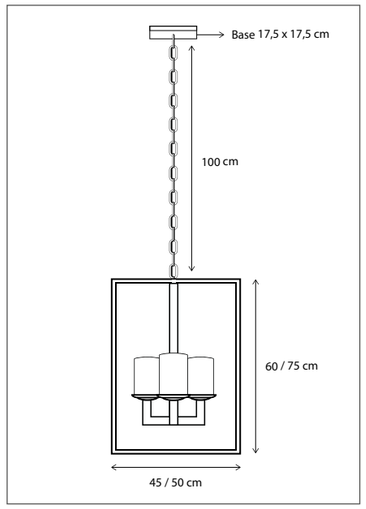

CODE	TYPE	FINISH	WATT	VOLT	FITTING
BVL004G61	Bellefeu® vitrine lantern medium - 4 candles glass	Bronze	4 x 2,4	230	-
BVL004G76	Bellefeu® vitrine lantern large - 4 candles glass	Bronze	4 x 2,4	230	-
BVL104G61	Bellefeu® vitrine lantern medium - 4 candles glass	Brushed nickel	4 x 2,4	230	-
BVL104G76	Bellefeu® vitrine lantern large - 4 candles glass	Brushed nickel	4 x 2,4	230	-
BVL204G61	Bellefeu® vitrine lantern medium - 4 candles glass	Chrome	4 x 2,4	230	-
BVL204G76	Bellefeu® vitrine lantern large - 4 candles glass	Chrome	4 x 2,4	230	-

Contact us for:
Customization & connectivity

BELLEFEU VITRINE LANTERN

SUSPENSION

CODE	TYPE	FINISH	WATT	VOLT	FITTING
BAL004G61	Bellefeu® vitrine lantern medium - 4 candles alabaster	Bronze		4 x 2,4	230
BAL004G76	Bellefeu® vitrine lantern large - 4 candles alabaster	Bronze		4 x 2,4	230
BAL104G61	Bellefeu® vitrine lantern medium - 4 candles alabaster	Brushed nickel		4 x 2,4	230
BAL104G76	Bellefeu® vitrine lantern large - 4 candles alabaster	Brushed nickel		4 x 2,4	230
BAL204G61	Bellefeu® vitrine lantern medium - 4 candles alabaster	Chrome		4 x 2,4	230
BAL204G76	Bellefeu® vitrine lantern large - 4 candles alabaster	Chrome		4 x 2,4	230

Contact us for:
Customization & connectivity

SCAN & DISCOVER
THE BELLEFEU EFFECT

Authentage Catalogus 2024 Authentage Katalogus 2024 Authentage Catalogue 2024 Authentage Katalog 2024 Authentage Verlichting Authentage Lighting Authentage éclairage Authentage Beleuchtung
Authentage Webshop Authentage Verlichting Authentage Armaturen Authentage Winkels Authentage Verkooppunten Authentage Verdelers Authentage Verdeelpunten Authentage België Authentage Nederland Authentage Vente en Ligne Authentage Boutique Vente en Ligne Authentage Luminaires Authentage éclairage
Authentage Revendeurs Authentage Points de vente Authentage Magasins Authentage Boutiques Authentage Points de distribution Authentage France Authentage Lighting Authentage Retailers Authentage Dealers Authentage Distributors Authentage Points of sale Authentage Resellers Authentage England
Authentage Beleuchtung Authent Beleuchtung Authentage Leuchten Authentage Händler Authentage Shops Authentage Verkaufsstellen Authentage Vertriebspartner Authentage Deutschland Authentage E-shop Authentage Geschäfte Authentage Vertriebsstellen

www.Bcosy.be - Waarschoot - België - Belgique - Belgium - Belgien tel 0032 (0) 9 378 24 30 Mail: info@bcosy.be

GRACIEUZE LANTERN SMALL/NORMAL

SUSPENSION

IP 43

An extra spot can be added in the ceiling of the normal variant (1L --> 2L).
Lamps not included, consult light source guide for our advice.



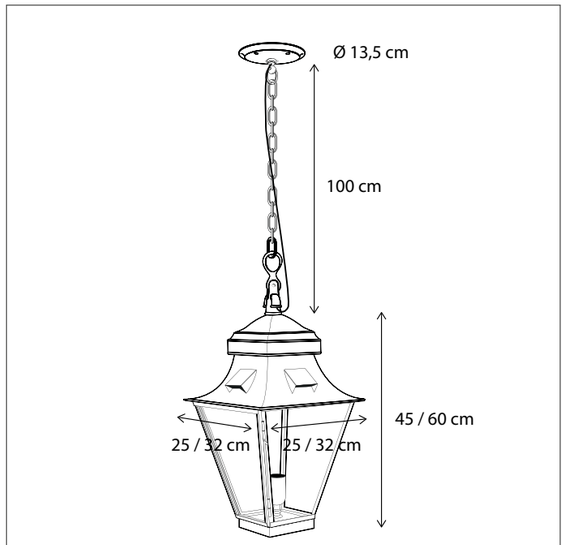

CODE	TYPE	FINISH	WATT	VOLT	FITTING
GRA001CS3	Gracieuze lantern small 1L	Bronze	15	230	E27
GRA001CS5	Gracieuze lantern normal 1L	Bronze	15	230	E27
GRA002CS5	Gracieuze lantern normal 2L	Bronze	15 + 8	230	E27 + GU10

GRACIEUZE LANTERN GRAND

SUSPENSION

IP 43

4 extra spots can be added in the ceiling of the grand variant (4L --> 8L).
Lamps not included, consult light source guide for our advice.

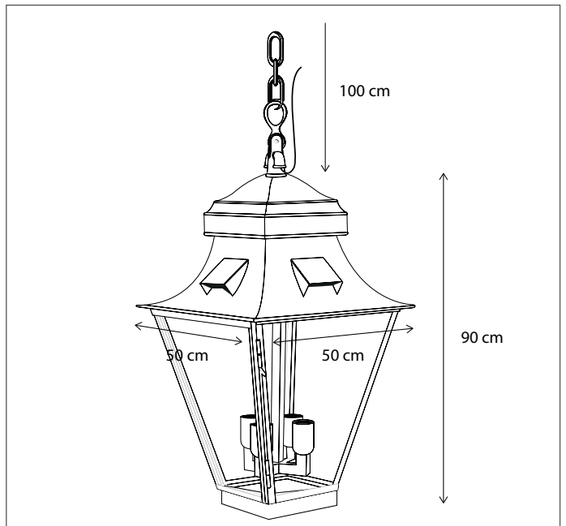



CODE	TYPE	FINISH	WATT	VOLT	FITTING
GRA004CS9	Gracieuze lantern grand 4L	Bronze	4 x15	230	E27
GRA008CS9	Gracieuze lantern grand 8L	Bronze	4 x 15 + 4 x 8	230	E27 + GU10

SCAN & DISCOVER
THE ADVANTAGE OF BRASS

Contact us for:
Customization & connectivity

Contact us for:
Customization & connectivity

Authentage Catalogus 2024 Authentage Katalogus 2024 Authentage Catalogue 2024 Authentage Katalog 2024 Authentage Verlichting Authentage Lighting Authentage éclairage Authentage Beleuchtung
Authentage Webshop Authentage Verlichting Authentage Armaturen Authentage Winkels Authentage Verkooppunten Authentage Verdelers Authentage Verdeelpunten Authentage België Authentage Nederland Authentage Vente en Ligne Authentage Boutique Vente en Ligne Authentage Luminaires Authentage éclairage
Authentage Revendeurs Authentage Points de vente Authentage Magasins Authentage Boutiques Authentage Points de distribution Authentage France Authentage Lighting Authentage Retailers Authentage Dealers Authentage Distributors Authentage Points of sale Authentage Resellers Authentage England
Authentage Beleuchtung Authent Beleuchtung Authentage Leuchten Authentage Händler Authentage Shops Authentage Verkaufsstellen Authentage Vertriebspartner Authentage Deutschland Authentage E-shop Authentage Geschäfte Authentage Vertriebsstellen

www.Bcosy.be - Waarschoot - België - Belgique - Belgium - Belgien tel 0032 (0) 9 378 24 30 Mail: info@bcosy.be

ELEBASE ON CHAIN

SUSPENSION

IP 43

Lamps not included, consult light source guide for our advice.

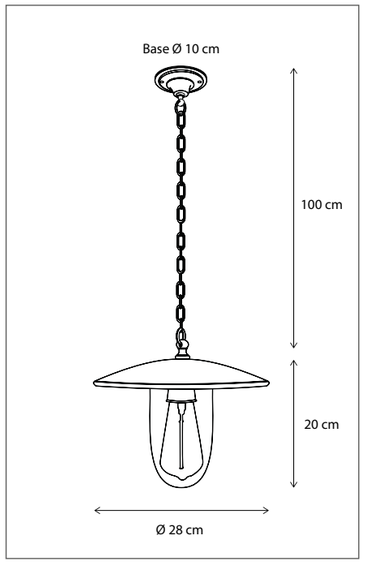



CODE	TYPE	FINISH	WATT	VOLT	FITTING
ELB00120E	Elébase on chain outdoor	Bronze	15	230	E27
ELB10120E	Elébase on chain outdoor	Brushed nickel	15	230	E27
ELB20120E	Elébase on chain outdoor	Chrome	15	230	E27

Contact us for:

Customization & connectivity

Authentage Catalogus 2024 Authentage Katalogus 2024 Authentage Catalogue 2024 Authentage Katalog 2024 Authentage Verlichting Authentage Lighting Authentage éclairage Authentage Beleuchtung
Authentage Webshop Authentage Verlichting Authentage Armaturen Authentage Winkels Authentage Verkooppunten Authentage Verdelers Authentage Verdeelpunten Authentage België Authentage Nederland Authentage Vente en Ligne Authentage Boutique Vente en Ligne Authentage Luminaires Authentage éclairage
Authentage Revendeurs Authentage Points de vente Authentage Magasins Authentage Boutiques Authentage Points de distribution Authentage France Authentage Lighting Authentage Retailers Authentage Dealers Authentage Distributors Authentage Points of sale Authentage Resellers Authentage England
Authentage Beleuchtung Authent Beleuchtung Authentage Leuchten Authentage Händler Authentage Shops Authentage Verkaufsstellen Authentage Vertriebspartner Authentage Deutschland Authentage E-shop Authentage Geschäfte Authentage Vertriebsstellen

www.Bcosy.be - Waarschoot - België - Belgique - Belgium - Belgien tel 0032 (0) 9 378 24 30 Mail: info@bcosy.be

ELEBASE ON TUBE

SUSPENSION

IP 43

Lamps not included, consult light source guide for our advice.



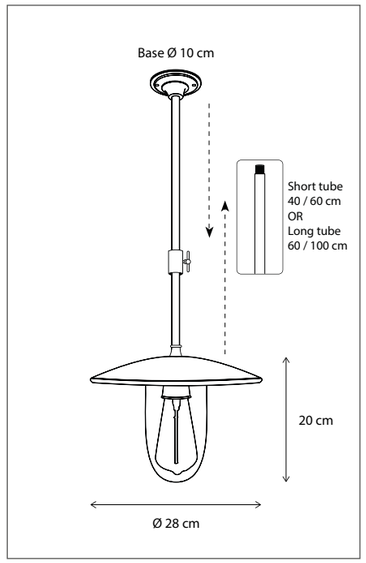

CODE	TYPE	FINISH	WATT	VOLT	FITTING
ELB0012E6	Elébase on short tube 40 cm - 60 cm outdoor	Bronze	15	230	E27
ELB0012E0	Elébase on long tube 60 cm - 100 cm outdoor	Bronze	15	230	E27
ELB1012E6	Elébase on short tube 40 cm - 60 cm outdoor	Brushed nickel	15	230	E27
ELB1012E0	Elébase on long tube 60 cm - 100 cm outdoor	Brushed nickel	15	230	E27
ELB2012E6	Elébase on short tube 40 cm - 60 cm outdoor	Chrome	15	230	E27
ELB2012E0	Elébase on long tube 60 cm - 100 cm outdoor	Chrome	15	230	E27

SUSPENSION I ELEBASE

OUTDOOR

SCAN & DISCOVER
THE ADVANTAGE OF BRASS

Contact us for:
Customization & connectivity

ELEGANCE ON CHAIN

SUSPENSION

IP 43

DALI

Lamps not included, consult light source guide for our advice.

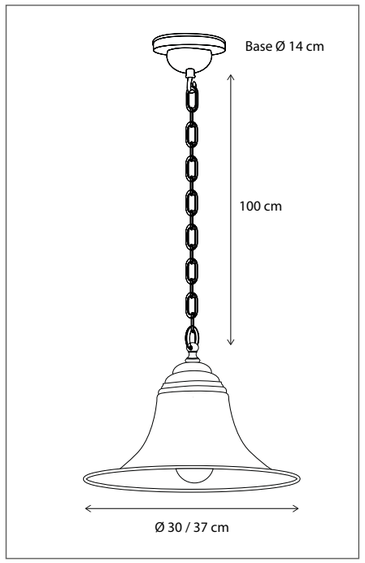



CODE	TYPE	FINISH	WATT	VOLT	FITTING
ELE0012E1	Elégance on chain petite outdoor	Bronze	15	230	E27
ELE0012E2	Elégance on chain grande outdoor	Bronze	15	230	E27
ELE1012E1	Elégance on chain petite outdoor	Brushed nickel	15	230	E27
ELE1012E2	Elégance on chain grande outdoor	Brushed nickel	15	230	E27
ELE2012E1	Elégance on chain petite outdoor	Chrome	15	230	E27
ELE2012E2	Elégance on chain grande outdoor	Chrome	15	230	E27

SUSPENSION I ELEGANCE

OUTDOOR

SCAN & DISCOVER
THE ADVANTAGE OF BRASS

Contact us for:
Customization & connectivity

Authentage Catalogus 2024 Authentage Katalogus 2024 Authentage Catalogue 2024 Authentage Katalog 2024 Authentage Verlichting Authentage Lighting Authentage éclairage Authentage Beleuchtung
Authentage Webshop Authentage Verlichting Authentage Armaturen Authentage Winkels Authentage Verkooppunten Authentage Verdelers Authentage Verdeelpunten Authentage België Authentage Nederland Authentage Vente en Ligne Authentage Boutique Vente en Ligne Authentage Luminaires Authentage éclairage
Authentage Revendeurs Authentage Points de vente Authentage Magasins Authentage Boutiques Authentage Points de distribution Authentage France Authentage Lighting Authentage Retailers Authentage Dealers Authentage Distributors Authentage Points of sale Authentage Resellers Authentage England
Authentage Beleuchtung Authent Beleuchtung Authentage Leuchten Authentage Händler Authentage Shops Authentage Verkaufsstellen Authentage Vertriebspartner Authentage Deutschland Authentage E-shop Authentage Geschäfte Authentage Vertriebsstellen

www.Bcosy.be - Waarschoot - België - Belgique - Belgium - Belgien tel 0032 (0) 9 378 24 30 Mail: info@bcosy.be

Accessories

CANDLE WAX / GLASS / ALABASTER 470
KELVIN KILLER® / FILTER 474
DECORATIVE GLASS 475
SHADE 478
PEDESTAL 480
CONNECTION SYSTEM 481
BUILT-IN ACCESSORIES 483
DRIVER / TRANSFORMER 486
LED STRIP 488
CABLE 489
CHAIN 490
SENSOR 491
SWITCH 492
DIMMER 493
CONNECTIVITY 494
MAINTENANCE KIT 495



CATALOGUE I ACCESSORIES

Authentage Catalogus 2024 Authentage Katalogus 2024 Authentage Catalogue 2024 Authentage Katalog 2024 Authentage Verlichting Authentage Lighting Authentage éclairage Authentage Beleuchtung
Authentage Webshop Authentage Verlichting Authentage Armaturen Authentage Winkels Authentage Verkooppunten Authentage Verdelers Authentage Verdeelpunten Authentage België Authentage Nederland Authentage Vente en Ligne Authentage Boutique Vente en Ligne Authentage Luminaires Authentage éclairage
Authentage Revendeurs Authentage Points de vente Authentage Magasins Authentage Boutiques Authentage Points de distribution Authentage France Authentage Lighting Authentage Retailers Authentage Dealers Authentage Distributors Authentage Points of sale Authentage Resellers Authentage England
Authentage Beleuchtung Authent Beleuchtung Authentage Leuchten Authentage Händler Authentage Shops Authentage Verkaufsstellen Authentage Vertriebspartner Authentage Deutschland Authentage E-shop Authentage Geschäfte Authentage Vertriebsstellen

www.Bcosy.be - Waarschoot - België - Belgique - Belgium - Belgien tel 0032 (0) 9 378 24 30 Mail: info@bcosy.be


Linnen


White


Glass


Alabaster

CODE	TYPE	FINISH
BCA610W09	Candle wax H9 cm - Ø10 cm	Linnen
BCA610W12	Candle wax H12 cm - Ø10 cm	Linnen
BCA610W15	Candle wax H15 cm - Ø10 cm	Linnen
BCA610W20	Candle wax H20 cm - Ø10 cm	Linnen
BCA610W25	Candle wax H25 cm - Ø10 cm	Linnen
BCA612W09	Candle wax H9 cm - Ø12 cm	Linnen
BCA612W12	Candle wax H12 cm - Ø12 cm	Linnen
BCA612W15	Candle wax H15 cm - Ø12 cm	Linnen
BCA612W20	Candle wax H20 cm - Ø12 cm	Linnen
BCA612W25	Candle wax H25 cm - Ø12 cm	Linnen
BCA510W09	Candle wax H9 cm - Ø10 cm	White
BCA510W12	Candle wax H12 cm - Ø10 cm	White
BCA510W15	Candle wax H15 cm - Ø10 cm	White
BCA510W20	Candle wax H20 cm - Ø10 cm	White
BCA510W25	Candle wax H25 cm - Ø10 cm	White
BCA512W09	Candle wax H9 cm - Ø12 cm	White
BCA512W12	Candle wax H12 cm - Ø12 cm	White

CODE	TYPE	FINISH
BCA512W15	Candle wax H15 cm - Ø12 cm	White
BCA512W20	Candle wax H20 cm - Ø12 cm	White
BCA512W25	Candle wax H25 cm - Ø12 cm	White
BCA610G09	Candle glass H9 cm - Ø10 cm	Glass
BCA610G12	Candle glass H12 cm - Ø10 cm	Glass
BCA610G15	Candle glass H15 cm - Ø10 cm	Glass
BCA610G20	Candle glass H20 cm - Ø10 cm	Glass
BCA612G09	Candle glass H9 cm - Ø12 cm	Glass
BCA612G12	Candle glass H12 cm - Ø12 cm	Glass
BCA612G15	Candle glass H15 cm - Ø12 cm	Glass
BCA612G20	Candle glass H20 cm - Ø12 cm	Glass
BCA710A09	Candle alabaster H9 cm - Ø10 cm	Alabaster
BCA710A12	Candle alabaster H12 cm - Ø10 cm	Alabaster
BCA710A15	Candle alabaster H15 cm - Ø10 cm	Alabaster
BCA710A20	Candle alabaster H20 cm - Ø10 cm	Alabaster
BCA712A25	Candle alabaster H25 cm - Ø12 cm	Alabaster

Contact us for:
Customization & connectivity

Contact us for:
Customization & connectivity

Authentage Catalogus 2024 Authentage Katalogus 2024 Authentage Catalogue 2024 Authentage Katalog 2024 Authentage Verlichting Authentage Lighting Authentage éclairage Authentage Beleuchtung
Authentage Webshop Authentage Verlichting Authentage Armaturen Authentage Winkels Authentage Verkooppunten Authentage Verdelers Authentage Verdeelpunten Authentage België Authentage Nederland Authentage Vente en Ligne Authentage Boutique Vente en Ligne Authentage Luminaires Authentage éclairage
Authentage Revendeurs Authentage Points de vente Authentage Magasins Authentage Boutiques Authentage Points de distribution Authentage France Authentage Lighting Authentage Retailers Authentage Dealers Authentage Distributors Authentage Points of sale Authentage Resellers Authentage England
Authentage Beleuchtung Authent Beleuchtung Authentage Leuchten Authentage Händler Authentage Shops Authentage Verkaufsstellen Authentage Vertriebspartner Authentage Deutschland Authentage E-shop Authentage Geschäfte Authentage Vertriebsstellen

www.Bcosy.be - Waarschoot - België - Belgique - Belgium - Belgien tel 0032 (0) 9 378 24 30 Mail: info@bcosy.be

KELVIN KILLER® FILTER

ACCESSORIES



Kelvin Killer®



Frosted glass

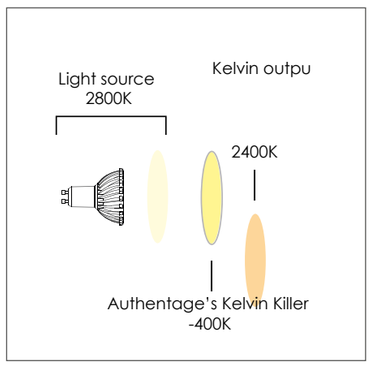

CODE	TYPE	EFFECT
MICFROGLA	Frosted glass micro	Enhances light distribution
AURKEL400	Kelvin killer glass aureole	Reduces the light temperature with 400K
BALKEL400	Kelvin killer glass balume	Reduces the light temperature with 400K
CENKEL400	Kelvin killer glass centonze	Reduces the light temperature with 400K
MICKEL400	Kelvin killer glass micro	Reduces the light temperature with 400K
MACKEL400	Kelvin killer glass macro	Reduces the light temperature with 400K
GRAKEL400	Kelvin killer glass gracieuze	Reduces the light temperature with 400K

DECORATIVE GLASS MOEMOE / BOMPA

ACCESSORIES



Clear ribbed



Clear awry



Clear piramid



Frosted skirt 1



Frosted skirt 2



Opal piramid



Opal bowl

CODE	TYPE	FINISH
MOE000160	Glass clear ribbed moemoe / bompa	Clear
MOE000350	Glass clear awry moemoe / bompa	Clear
MOE000150	Glass clear piramid moemoe / bompa	Clear
MOE000260	Glass frosted skirt 1 moemoe / bompa	Frosted
MOE000250	Glass frosted skirt 2 moemoe / bompa	Frosted
MOE000700	Glass opal piramid moemoe / bompa	Opal
MOE000600	Glass opal bowl moemoe / bompa	Opal

SCAN & DISCOVER
OUR PATENTED KELVIN KILLER®

Contact us for:
Customization & connectivity

Contact us for:
Customization & connectivity

Authentage Catalogus 2024 Authentage Katalogus 2024 Authentage Catalogue 2024 Authentage Katalog 2024 Authentage Verlichting Authentage Lighting Authentage éclairage Authentage Beleuchtung
Authentage Webshop Authentage Verlichting Authentage Armaturen Authentage Winkels Authentage Verkooppunten Authentage Verdelers Authentage Verdeelpunten Authentage België Authentage Nederland Authentage Vente en Ligne Authentage Boutique Vente en Ligne Authentage Luminaires Authentage éclairage
Authentage Revendeurs Authentage Points de vente Authentage Magasins Authentage Boutiques Authentage Points de distribution Authentage France Authentage Lighting Authentage Retailers Authentage Dealers Authentage Distributors Authentage Points of sale Authentage Resellers Authentage England
Authentage Beleuchtung Authent Beleuchtung Authentage Leuchten Authentage Händler Authentage Shops Authentage Verkaufsstellen Authentage Vertriebspartner Authentage Deutschland Authentage E-shop Authentage Geschäfte Authentage Vertriebsstellen

www.Bcosy.be - Waarschoot - België - Belgique - Belgium - Belgien tel 0032 (0) 9 378 24 30 Mail: info@bcosy.be



IP43



Wall



Ceiling 14 cm



Ceiling 21/25/30 cm

CODE	TYPE	FINISH
BNWGLA200	Spare glass bainwat IP43	Clear
BNWGLA510	Spare glass bainwat wall	Opal
BNWGLA514	Spare glass bainwat ceiling 14 cm	Opal
BNWGLA521	Spare glass bainwat ceiling 21 cm	Opal
BNWGLA525	Spare glass bainwat ceiling 25 cm	Opal
BNWGLA530	Spare glass bainwat ceiling 30 cm	Opal

Contact us for:
Customization & connectivity



Clear glass



Opal glass

CODE	TYPE	FINISH
ELB00GLAS	Clear glass Elébase	Clear
ELB50GLAS	Opal glass Elébase	Opal

Contact us for:
Customization & connectivity

Authentage Catalogus 2024 Authentage Katalogus 2024 Authentage Catalogue 2024 Authentage Katalog 2024 Authentage Verlichting Authentage Lighting Authentage éclairage Authentage Beleuchtung
Authentage Webshop Authentage Verlichting Authentage Armaturen Authentage Winkels Authentage Verkooppunten Authentage Verdelers Authentage Verdeelpunten Authentage België Authentage Nederland Authentage Vente en Ligne Authentage Boutique Vente en Ligne Authentage Luminaires Authentage éclairage
Authentage Revendeurs Authentage Points de vente Authentage Magasins Authentage Boutiques Authentage Points de distribution Authentage France Authentage Lighting Authentage Retailers Authentage Dealers Authentage Distributors Authentage Points of sale Authentage Resellers Authentage England
Authentage Beleuchtung Authent Beleuchtung Authentage Leuchten Authentage Händler Authentage Shops Authentage Verkaufsstellen Authentage Vertriebspartner Authentage Deutschland Authentage E-shop Authentage Geschäfte Authentage Vertriebsstellen

www.Bcosy.be - Waarschoot - België - Belgique - Belgium - Belgien tel 0032 (0) 9 378 24 30 Mail: info@bcosy.be



Blanc cassé small



Pirée chiné small

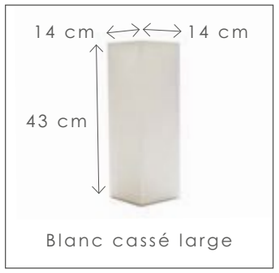

Blanc cassé large

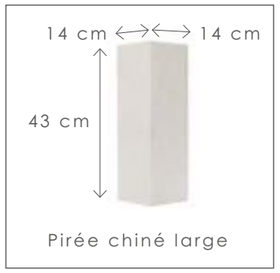

Pirée chiné large

478

CODE	TYPE	FINISH
SHSEV4BLC	Shade blanc cassé small E27	Blanc cassé
SHSEV4LPC	Shade pirée chiné small E27	Pirée chiné
SHSEVPBLC	Shade blanc cassé large E27	Blanc cassé
SHSEVPLPC	Shade pirée chiné large E27	Pirée chiné

Contact us for:

Customization & connectivity



Blanc cassé



Pirée chiné



Black

479

CODE	TYPE	FINISH
SHAFICBLC	Shade with clip blanc cassé E14	Blanc cassé
SHAFICLPC	Shade with clip pirée chiné E14	Pirée chiné
SHAFICLNB	Shade with clip black E14	Black

Contact us for:

Customization & connectivity

Authentage Catalogus 2024 Authentage Katalogus 2024 Authentage Catalogue 2024 Authentage Katalog 2024 Authentage Verlichting Authentage Lighting Authentage éclairage Authentage Beleuchtung
Authentage Webshop Authentage Verlichting Authentage Armaturen Authentage Winkels Authentage Verkooppunten Authentage Verdelers Authentage Verdeelpunten Authentage België Authentage Nederland Authentage Vente en Ligne Authentage Boutique Vente en Ligne Authentage Luminaires Authentage éclairage
Authentage Revendeurs Authentage Points de vente Authentage Magasins Authentage Boutiques Authentage Points de distribution Authentage France Authentage Lighting Authentage Retailers Authentage Dealers Authentage Distributors Authentage Points of sale Authentage Resellers Authentage England
Authentage Beleuchtung Authent Beleuchtung Authentage Leuchten Authentage Händler Authentage Shops Authentage Verkaufsstellen Authentage Vertriebspartner Authentage Deutschland Authentage E-shop Authentage Geschäfte Authentage Vertriebsstellen

www.Bcosy.be - Waarschoot - België - Belgique - Belgium - Belgien tel 0032 (0) 9 378 24 30 Mail: info@bcosy.be

PEDESTAL

ACCESSORIES



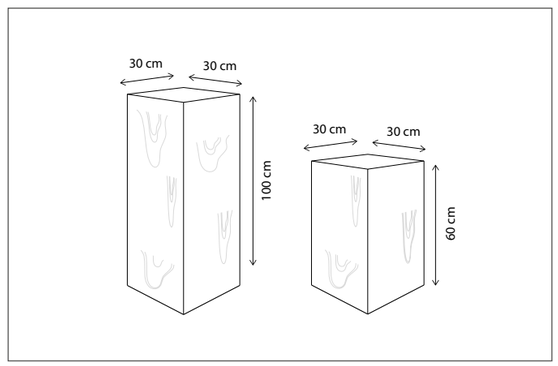

CODE	TYPE	FINISH
TOETSL306	Oak solid timber outdoor 60x30x30 cm	Oak Solid
TOETSL310	Oak solid timber outdoor 100x30x30 cm	Oak Solid
TOETIM306	Oak veneer indoor 60x30x30 cm	Oak Veneer
TOETIM310	Oak veneer indoor 100x30x30 cm	Oak Veneer

Contact us for:

Customization & connectivity

CONNECTION SYSTEM ELIGNE / TRACK

ACCESSORIES



I connection



L connection



T connection

CODE	TYPE	FINISH
ELP00ICON	I connection track-system / eligne	Bronze
ELP00LCON	L connection track-system / eligne	Bronze
ELP00TCON	T connection track-system / eligne	Bronze
ELP10ICON	I connection track-system / eligne	Brushed nickel
ELP10LCON	L connection track-system / eligne	Brushed nickel
ELP10TCON	T connection track-system / eligne	Brushed nickel
ELP20ICON	I connection track-system / eligne	Chrome
ELP20LCON	L connection track-system / eligne	Chrome
ELP20TCON	T connection track-system / eligne	Chrome

Contact us for:

Customization & connectivity

Authentage Catalogus 2024 Authentage Katalogus 2024 Authentage Catalogue 2024 Authentage Katalog 2024 Authentage Verlichting Authentage Lighting Authentage éclairage Authentage Beleuchtung
Authentage Webshop Authentage Verlichting Authentage Armaturen Authentage Winkels Authentage Verkooppunten Authentage Verdelers Authentage Verdeelpunten Authentage België Authentage Nederland Authentage Vente en Ligne Authentage Boutique Vente en Ligne Authentage Luminaires Authentage éclairage
Authentage Revendeurs Authentage Points de vente Authentage Magasins Authentage Boutiques Authentage Points de distribution Authentage France Authentage Lighting Authentage Retailers Authentage Dealers Authentage Distributors Authentage Points of sale Authentage Resellers Authentage England
Authentage Beleuchtung Authent Beleuchtung Authentage Leuchten Authentage Händler Authentage Shops Authentage Verkaufsstellen Authentage Vertriebspartner Authentage Deutschland Authentage E-shop Authentage Geschäfte Authentage Vertriebsstellen

www.Bcosy.be - Waarschoot - België - Belgique - Belgium - Belgien tel 0032 (0) 9 378 24 30 Mail: info@bcosy.be

CONNECTION SYSTEM MATISSE

ACCESSORIES



Minaret matisse



Corner connection



I connection

CODE	TYPE	FINISH
MON000MIN	Minaret matisse	Bronze
MON00LCON	Corner connection matisse	Bronze
MON000CON	I connection matisse	Bronze
MON100MIN	Minaret matisse	Brushed nickel
MON10LCON	Corner connection matisse	Brushed nickel
MON100CON	I connection matisse	Brushed nickel
MON200MIN	Minaret matisse	Chrome
MON20LCON	Corner connection matisse	Chrome
MON200CON	I connection matisse	Chrome
MON300MIN	Minaret matisse	Polished brass
MON30LCON	Corner connection matisse	Polished brass
MON300CON	I connection matisse	Polished brass

Contact us for:

Customization & connectivity

BUILT - IN ACCESORIES

ACCESSORIES



Built-in box 1L



Built-in box 2L

CODE	TYPE	DEPTH (cm)	LENGTH (cm)	WIDTH (cm)
CENBOXCL1	Built-in box centonze 1L	13	18,5	18,5
CENBOXCL2	Built-in box centonze 2L	13	33,5	18,5
CENBOXCL3	Built-in box centonze 3L	13	48	18,5
CENBOXCL4	Built-in box centonze 4L	13	33,5	33,5
COMBOXCS1	Built-in box comète 1L	13	14	14
COMBOXCS2	Built-in box comète 2L	13	25	14
COMBOXCS3	Built-in box comète 3L	13	35,5	14
COMBOXCS4	Built-in box comète 4L	13	25	25
CYOBOX0SM	Built-in box 'create your own' small	13	25	14
CYOBOX0ME	Built-in box 'create your own' medium	13	35,5	14
CYOBOX0LA	Built-in box 'create your own' large	13	33,5	18,5
CYOBOX0EL	Built-in box 'create your own' extra large	13	48	18,5

Contact us for:

Customization & connectivity

Authentage Catalogus 2024 Authentage Katalogus 2024 Authentage Catalogue 2024 Authentage Katalog 2024 Authentage Verlichting Authentage Lighting Authentage éclairage Authentage Beleuchtung
Authentage Webshop Authentage Verlichting Authentage Armaturen Authentage Winkels Authentage Verkooppunten Authentage Verdelers Authentage Verdeelpunten Authentage België Authentage Nederland Authentage Vente en Ligne Authentage Boutique Vente en Ligne Authentage Luminaires Authentage éclairage
Authentage Revendeurs Authentage Points de vente Authentage Magasins Authentage Boutiques Authentage Points de distribution Authentage France Authentage Lighting Authentage Retailers Authentage Dealers Authentage Distributors Authentage Points of sale Authentage Resellers Authentage England
Authentage Beleuchtung Authent Beleuchtung Authentage Leuchten Authentage Händler Authentage Shops Authentage Verkaufsstellen Authentage Vertriebspartner Authentage Deutschland Authentage E-shop Authentage Geschäfte Authentage Vertriebsstellen

www.Bcosy.be - Waarschoot - België - Belgique - Belgium - Belgien tel 0032 (0) 9 378 24 30 Mail: info@bcosy.be

CONNECTION SYSTEM TUBE

ACCESSORIES

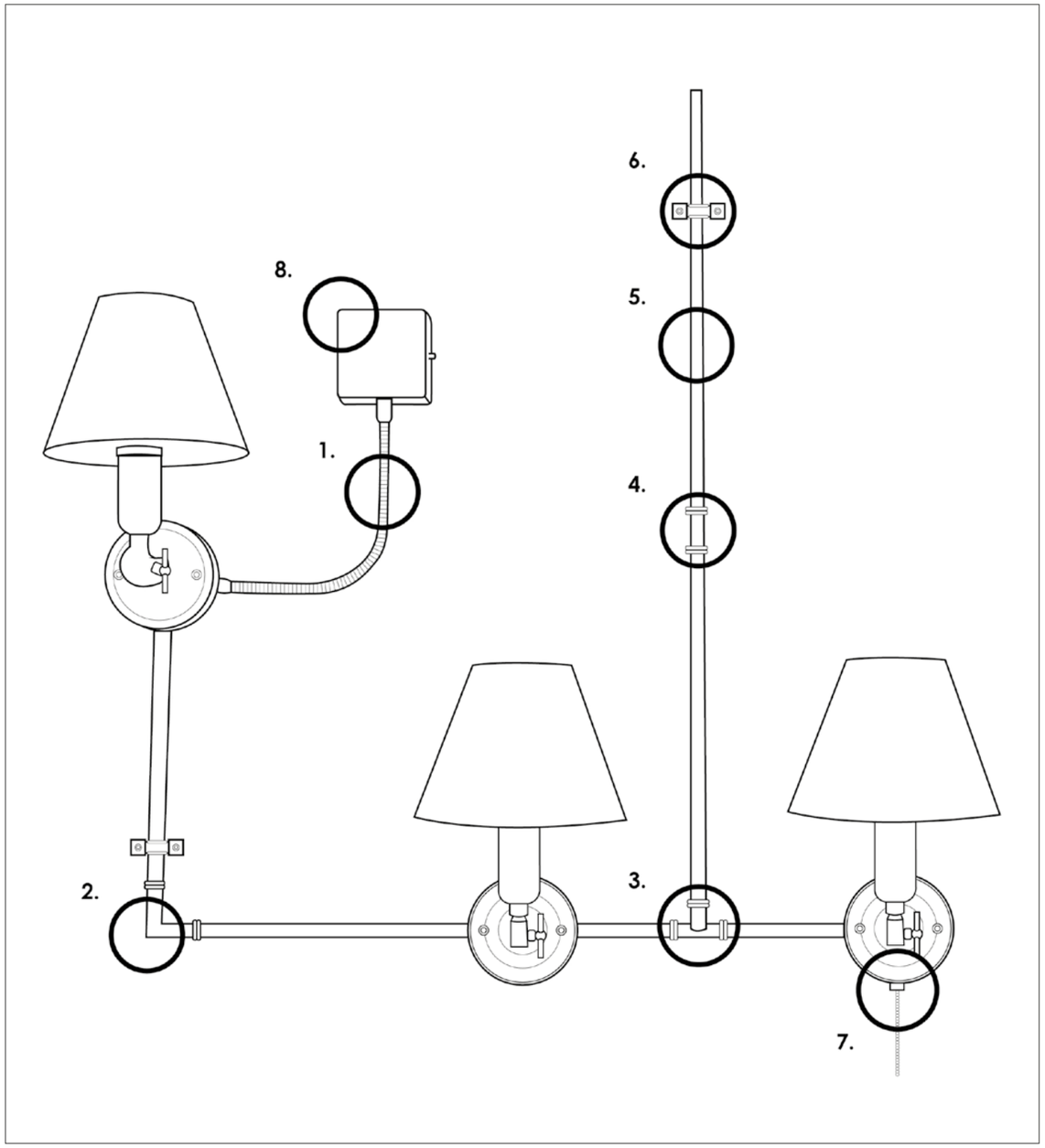



1. Flex



2. L.Tube Connection



3. T.Tube Connection



4. I.Tube Connection



5. Tube 10mm



6. Tube Clamp Piece



7. On/Off Chain Switch



8. Junction Box

CODE	TYPE	FINISH
TOE025F08	Flex tube connection small	Bronze
TOE030F09	Flex tube connection large	Bronze
TOE000003	L tube connection	Bronze
TOE000001	T tube connection	Bronze
TOE000002	I tube connection	Bronze
TOE000004	Tube 10 mm - to connect until 100 cm	Bronze
TOE00002M	Tube 10 mm - to connect until 200 cm	Bronze
TOE000006	Tube clamp piece	Bronze
TOE0JUV60	Junction box square base 6x6x3 cm	Bronze
TOE0JUV70	Junction box square base 7x7x3 cm	Bronze
TOE0JUF83	Junction box round base 83 mm	Bronze
TOE125F08	Flex tube connection small	Brushed nickel
TOE130F09	Flex tube connection large	Brushed nickel
TOE100003	L tube connection	Brushed nickel
TOE100001	T tube connection	Brushed nickel
TOE100002	I tube connection	Brushed nickel
TOE100004	Tube 10 mm - to connect until 100 cm	Brushed nickel
TOE10002M	Tube 10 mm - to connect until 200 cm	Brushed nickel
TOE100006	Tube clamp piece	Brushed nickel
TOE1JUV60	Junction box square base 6x6x3 cm	Brushed nickel
TOE1JUV70	Junction box square base 7x7x3 cm	Brushed nickel
TOE1JUF83	Junction box round base 83 mm	Brushed nickel
TOE225F08	Flex tube connection small	Chrome
TOE230F09	Flex tube connection large	Chrome
TOE200003	L tube connection	Chrome
TOE200001	T tube connection	Chrome
TOE200002	I tube connection	Chrome
TOE200004	Tube 10 mm - to connect until 100 cm	Chrome
TOE20002M	Tube 10 mm - to connect until 200 cm	Chrome
TOE200006	Tube clamp piece	Chrome
TOE2JUV60	Junction box square base 6x6x3 cm	Chrome
TOE2JUV70	Junction box square base 7x7x3 cm	Chrome
TOE2JUF83	Junction box round base 83 mm	Chrome

Contact us for:

Customization & connectivity

Contact us for:

Customization & connectivity

ACCESSORIES I CONNECTION SYSTEM TUBE

Authentage Catalogus 2024 Authentage Katalogus 2024 Authentage Catalogue 2024 Authentage Katalog 2024 Authentage Verlichting Authentage Lighting Authentage éclairage Authentage Beleuchtung
Authentage Webshop Authentage Verlichting Authentage Armaturen Authentage Winkels Authentage Verkooppunten Authentage Verdelers Authentage Verdeelpunten Authentage België Authentage Nederland Authentage Vente en Ligne Authentage Boutique Vente en Ligne Authentage Luminaires Authentage éclairage
Authentage Revendeurs Authentage Points de vente Authentage Magasins Authentage Boutiques Authentage Points de distribution Authentage France Authentage Lighting Authentage Retailers Authentage Dealers Authentage Distributors Authentage Points of sale Authentage Resellers Authentage England
Authentage Beleuchtung Authent Beleuchtung Authentage Leuchten Authentage Händler Authentage Shops Authentage Verkaufsstellen Authentage Vertriebspartner Authentage Deutschland Authentage E-shop Authentage Geschäfte Authentage Vertriebsstellen

www.Bcosy.be - Waarschoot - België - Belgique - Belgium - Belgien tel 0032 (0) 9 378 24 30 Mail: info@bcosy.be

DRIVER / TRANSFORMER

ACCESSORIES

Select your driver with following steps

STEP 1

SELECT TYPE OF DRIVER (12V OR 24V)

Collection	Type of driver
Centonze, Marron, Comète, Poire, Fleure, Fleure Twin, Fiston, Monet, Grille, Subtile, Charmond (retrofit), Macro	12V
Matisse, Pipilier, Beautique, Galed, Charmond (integrated), Eclips	24V

STEP 2

CALCULATE TOTAL POWER CONSUMPTION OF THIS CIRCUIT

How many products (N) do you combine on 1 driver?

Total power consumption = N x power consumption of 1 product

STEP 3

CALCULATE REQUIRED DRIVER CAPACITY

LED lamp: use maximum 50% of total nominal power of the driver

Halogen lamp: use 100% of total nominal power of the transformer

STEP 4

LOCATION OF THE DRIVER / TRAFO

Indoor, outdoor or in the ground

EXAMPLE: Installation of 4 Centonze LED-spot with a bulb of 12W each in a living room

Step 1	Centonze requires 12V driver
Step 2	Total power consumption = 4(N) x 12W (power consumption of 1 product) = 48W
Step 3	LED lamp, only 50% of driver power can be used. Total required driver capacity is 2x48W=96W
Step 4	Indoor application (living room)
Result	Drivers TOETRAP10 (rectangular) or TOETRAR10 (round) can be used

Contact us for:

Customization & connectivity

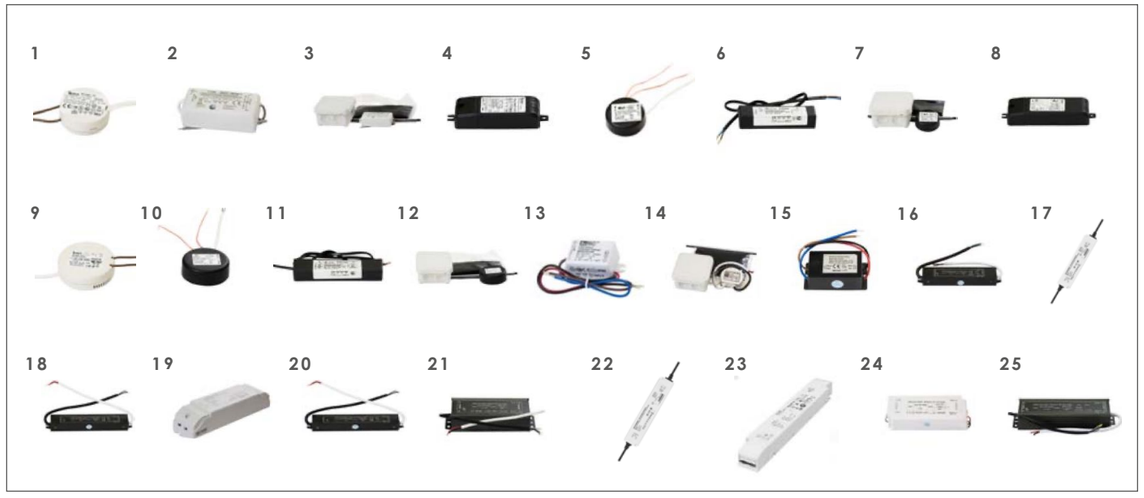

	CODE	TYPE	LOCATION	DIM	L(cm)	W(cm)	H(cm)
1	TOETRAR60	Transformer IP20 12V 50W	INDOOR	dimmable	Ø5		2
2	LEDRI1250	Transformer IP20 12V 50W	INDOOR	dimmable	7,5	3,5	2,6
3	LEDRW1250	Transformer IP68 12V 50W	GROUND	dimmable	9	9	5
4	TOETRAP60	Transformer IP20 12V 60W	INDOOR	dimmable	8,5	3	2
5	TOETR6560	Transformer IP65 12V 60W	OUTDOOR	dimmable	Ø5,3		2
6	TOETR656L	Transformer IP65 12V 60W	OUTDOOR	dimmable	10,4	3	2,1
7	TOETR6860	Transformer IP68 12V 60W	GROUND	dimmable	9	9	5
8	TOETRAP10	Transformer IP20 12V 105W	INDOOR	dimmable	10,5	3,5	2
9	TOETRAR10	Transformer IP20 12V 105W	INDOOR	dimmable	Ø7		2
10	TOETR6510	Transformer IP65 12V 105W	OUTDOOR	dimmable	Ø6,8		2,4
11	TOETR651L	Transformer IP65 12V 105W	OUTDOOR	dimmable	13,5	3	2
12	TOETR6810	Transformer IP68 12V 105W	GROUND	dimmable	9	9	5
13	TOEDR2404	Driver constant voltage IP65 24V 4W	OUTDOOR		3,8	2,7	2,1
14	LEDRW2412	Driver constant voltage IP68 24V 12W	GROUND		6,5	3,5	2,2
15	TOEDR2412	Driver constant voltage IP67 24V 12W	OUTDOOR		6,5	3,5	2,2
16	TOEDR2420	Driver constant voltage IP67 24V 20W	OUTDOOR		15,6	2,9	2,1
17	TOEDR2426	Driver constant voltage IP66 Platinum 24V 20W	OUTDOOR		20,8	4,3	2,6
18	TOEDR2430	Driver constant voltage IP67 24V 30W	OUTDOOR		18,1	2,9	2,1
19	TOEDR2436	Driver constant voltage Triac + push dim IP20 24V 36W	INDOOR	dimmable	17,5	4,5	3
20	TOEDR2445	Driver constant voltage IP67 24V 45W	OUTDOOR		22	2,9	2,1
21	TOEDR2460	Driver constant voltage IP67 24V 60W	OUTDOOR		17,8	6,7	3,8
22	TOEDR2466	Driver constant voltage IP66 Platinum 24V 60W	OUTDOOR		17,8	4,3	2,5
23	TOEDR2475	Driver constant voltage Triac + push dim IP20 24V 75W	INDOOR	dimmable	29,3	4,3	3,0
24	TOEDR2480	Driver constant voltage IP67 24V 80W	OUTDOOR		15,8	5,3	3,5
25	TOEDR2400	Driver constant voltage IP67 24V 100W	OUTDOOR		21,2	6,7	3,8

Contact us for:

Customization & connectivity

Authentage Catalogus 2024 Authentage Katalogus 2024 Authentage Catalogue 2024 Authentage Katalog 2024 Authentage Verlichting Authentage Lighting Authentage éclairage Authentage Beleuchtung
Authentage Webshop Authentage Verlichting Authentage Armaturen Authentage Winkels Authentage Verkooppunten Authentage Verdelers Authentage Verdeelpunten Authentage België Authentage Nederland Authentage Vente en Ligne Authentage Boutique Vente en Ligne Authentage Luminaires Authentage éclairage
Authentage Revendeurs Authentage Points de vente Authentage Magasins Authentage Boutiques Authentage Points de distribution Authentage France Authentage Lighting Authentage Retailers Authentage Dealers Authentage Distributors Authentage Points of sale Authentage Resellers Authentage England
Authentage Beleuchtung Authent Beleuchtung Authentage Leuchten Authentage Händler Authentage Shops Authentage Verkaufsstellen Authentage Vertriebspartner Authentage Deutschland Authentage E-shop Authentage Geschäfte Authentage Vertriebsstellen

www.Bcosy.be - Waarschoot - België - Belgique - Belgium - Belgien tel 0032 (0) 9 378 24 30 Mail: info@bcosy.be

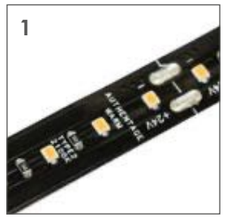

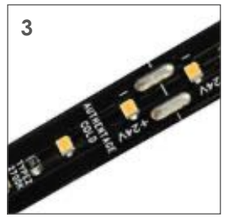

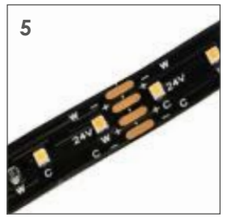















	CODE	TYPE	FINISH	LUMEN
1	**LEDSTB211**	Led strip IP20 24V 14,4W/m 2100K - 1 m	Black	740
2	**LEDSTB215**	Led strip IP20 24V 14,4W/m 2100K - 5 m	Black	740
3	**LEDSTB271**	Led strip IP20 24V 14,4W/m 2700K - 1 m	Black	800
4	**LEDSTB275**	Led strip IP20 24V 14,4W/m 2700K - 5 m	Black	800
5	**LEDSTS711**	Led strip IP20 24V 14,4W/m 2100/2700K - 1 m	Black	770
6	**LEDSTS715**	Led strip IP20 24V 14,4W/m 2100/2700K - 5 m	Black	770
7	**LEDSTS721**	Led strip IP20 24V 12W/m 2700K 700 LED/m - 1 m	Black	1000
8	**LEDSTS725**	Led strip IP20 24V 12W/m 2700K 700 LED/m - 5 m	Black	1000
9	**LEDSTS761**	Led strip IP66 24V 12W/m 2700K 700 LED/m - 1 m	White	900
10	**LEDSTS765**	Led strip IP66 24V 12W/m 2700K 700 LED/m - 5 m	White	900

Contact us for:

Customization & connectivity











CODE	TYPE	FINISH
TOE0CAB13	Cable twisted 1 m fabric	Brown
TOE0CAB21	Cable round 1 m fabric	Brown
TOE1CAB13	Cable twisted 1 m fabric	Grey
TOE1CAB21	Cable round 1 m fabric	Grey
TOE9CAB13	Cable round 1 m fabric	Black

Contact us for:

Customization & connectivity

Authentage Catalogus 2024 Authentage Katalogus 2024 Authentage Catalogue 2024 Authentage Katalog 2024 Authentage Verlichting Authentage Lighting Authentage éclairage Authentage Beleuchtung
Authentage Webshop Authentage Verlichting Authentage Armaturen Authentage Winkels Authentage Verkooppunten Authentage Verdelers Authentage Verdeelpunten Authentage België Authentage Nederland Authentage Vente en Ligne Authentage Boutique Vente en Ligne Authentage Luminaires Authentage éclairage
Authentage Revendeurs Authentage Points de vente Authentage Magasins Authentage Boutiques Authentage Points de distribution Authentage France Authentage Lighting Authentage Retailers Authentage Dealers Authentage Distributors Authentage Points of sale Authentage Resellers Authentage England
Authentage Beleuchtung Authent Beleuchtung Authentage Leuchten Authentage Händler Authentage Shops Authentage Verkaufsstellen Authentage Vertriebspartner Authentage Deutschland Authentage E-shop Authentage Geschäfte Authentage Vertriebsstellen

www.Bcosy.be - Waarschoot - België - Belgique - Belgium - Belgien tel 0032 (0) 9 378 24 30 Mail: info@bcosy.be

CHAIN

ACCESSORIES



CODE	TYPE	FINISH
TOE0CHA14	Chain normal (20x45mm) 1 m	Bronze
TOE0CHA16	Chain heavy (25x62mm) 1 m	Bronze
TOE1CHA14	Chain normal (20x45mm) 1 m	Brushed nickel
TOE1CHA16	Chain heavy (25x62mm) 1 m	Brushed nickel
TOE2CHA14	Chain normal (20x45mm) 1 m	Chrome
TOE2CHA16	Chain heavy (25x62mm) 1 m	Chrome

Contact us for:
Customization & connectivity

SENSOR

ACCESSORIES

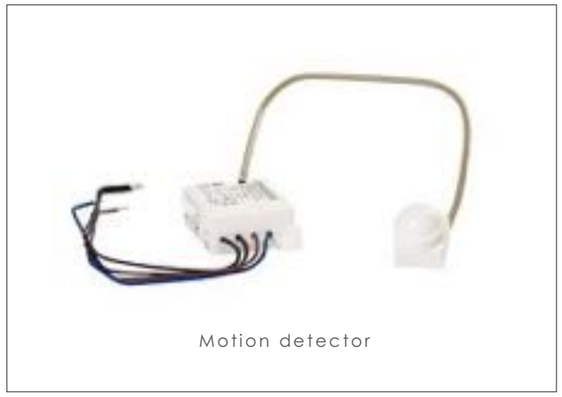

Motion detector



Day / Night detector

CODE	TYPE
TOEMOV001	Motion detector
TOENIG001	Day / night detector

Contact us for:
Customization & connectivity

Authentage Catalogus 2024 Authentage Katalogus 2024 Authentage Catalogue 2024 Authentage Katalog 2024 Authentage Verlichting Authentage Lighting Authentage éclairage Authentage Beleuchtung
Authentage Webshop Authentage Verlichting Authentage Armaturen Authentage Winkels Authentage Verkooppunten Authentage Verdelers Authentage Verdeelpunten Authentage België Authentage Nederland Authentage Vente en Ligne Authentage Boutique Vente en Ligne Authentage Luminaires Authentage éclairage
Authentage Revendeurs Authentage Points de vente Authentage Magasins Authentage Boutiques Authentage Points de distribution Authentage France Authentage Lighting Authentage Retailers Authentage Dealers Authentage Distributors Authentage Points of sale Authentage Resellers Authentage England
Authentage Beleuchtung Authent Beleuchtung Authentage Leuchten Authentage Händler Authentage Shops Authentage Verkaufsstellen Authentage Vertriebspartner Authentage Deutschland Authentage E-shop Authentage Geschäfte Authentage Vertriebsstellen

www.Bcosy.be - Waarschoot - België - Belgique - Belgium - Belgien tel 0032 (0) 9 378 24 30 Mail: info@bcosy.be



1 ON/OFF PULL



2 ON/OFF PUSH



3 ON/OFF TOGGLE



4 ON/OFF PUSH



5 ON/OFF FLOOR

	CODE	TYPE	FINISH
1	**TOE0ONOF1**	ON/OFF pull switch	Bronze
1	**TOE2ONOF1**	ON/OFF pull switch	Chrome
2	**TOECABST2**	ON/OFF push switch	Black
3	**TOE2ONOF2**	ON/OFF toggle switch	Chrome
4	**TOE2ONOF3**	ON/OFF push switch	Black
5	**TOE8ONOF1**	ON/OFF floor switch	Black

Contact us for:

Customization & connectivity



1 Floor dimmer



2 Slide dimmer



3 ON/OFF and slide dimmer



4 Slide dimmer

	CODE	TYPE	FINISH
	ELPDIM001	Dim-to-warm option eligne (integrated in product)	Black
	LEDIM4FADE	Entrance fade dim unit 12V-48V (dim unit, sensor)	Black
1	**TOEDIM001**	Floor dimmer 230V 20-300W	Black
2	**TOEDIM002**	Floor dimmer 20-60W Transfo 230V-12V (for halogen)	Black
3	**TOEDIM003**	Floor dimmer 230V 2-250W	Black
4	**TOEDIM004**	Floor Dimmer1-25W transfo 230V-12V (for LED)	Black

Contact us for:

Customization & connectivity

Authentage Catalogus 2024 Authentage Katalogus 2024 Authentage Catalogue 2024 Authentage Katalog 2024 Authentage Verlichting Authentage Lighting Authentage éclairage Authentage Beleuchtung
Authentage Webshop Authentage Verlichting Authentage Armaturen Authentage Winkels Authentage Verkooppunten Authentage Verdelers Authentage Verdeelpunten Authentage België Authentage Nederland Authentage Vente en Ligne Authentage Boutique Vente en Ligne Authentage Luminaires Authentage éclairage
Authentage Revendeurs Authentage Points de vente Authentage Magasins Authentage Boutiques Authentage Points de distribution Authentage France Authentage Lighting Authentage Retailers Authentage Dealers Authentage Distributors Authentage Points of sale Authentage Resellers Authentage England
Authentage Beleuchtung Authent Beleuchtung Authentage Leuchten Authentage Händler Authentage Shops Authentage Verkaufsstellen Authentage Vertriebspartner Authentage Deutschland Authentage E-shop Authentage Geschäfte Authentage Vertriebsstellen

www.Bcosy.be - Waarschoot - België - Belgique - Belgium - Belgien tel 0032 (0) 9 378 24 30 Mail: info@bcosy.be



1-2-3-4



5-6-7



8



9



10



11



12

ENOCEAN — **Remote control of Bellefeu and Eclips luminaires, scene setting not possible, handheld remotecontrols available on request**

	CODE	TYPE	FINISH	L(mm)	W(mm)	H(mm)
1	ENOA01230	EnOcean Actor 230V LED/HALOGEN Lamp dimmer	-	45	45	33
2	ENOA0124B	EnOcean Actor 24V NO (Candle Effect/Dynamic Dim)	-	45	45	33
3	ENOA0124V	EnOcean Actor 24V PWM dimmer for LED-strip	-	45	45	33
4	ENOS01RE1	EnOcean Remote in Wall Switch (2 channel) (recessed for push switch)	-	45	45	33
5	ENOSA1001	EnOcean Remote on Wall Switch (4 channel) (excl outer frame)	Antracite	73	73	15
6	ENOSC1001	EnOcean Remote on Wall Switch (4 channel) (excl outer frame)	Cream	73	73	15
7	ENOSW1001	EnOcean Remote on Wall Switch (4 channel) (excl outer frame)	White	73	73	15

CASAMBI — **Remote control by free Casambi app on smartphone, scenesetting possible for Bellefeu and Eclipse luminaires, bluetooth**

	CODE	TYPE	FINISH	L(mm)	W(mm)	H(mm)
8	CASDIM150	Casambi multi dimmodule max 100W	-	40	36	14
9	CAS010V01	Casambi 0-10V module for candles	-	56	35	22
10	CASPWM200	Casambi 2ch PWM dimmer 24V max 250W	-	122	39	18

DALI — **Fully integrate the Bellefeu luminaires into your Dali system, scenesetting possible**

	CODE	TYPE	FINISH	L(mm)	W(mm)	H(mm)
11	TOEDALI10	Dali to 1-10V for candles	-	42	28	14
12	TOEDALI25	Dali multidimmer led 230V lamps max 25W	-	60	32	15



CODE	TYPE
TOEBRONST	Maintenance kit bronze

Contact us for:

Customization & connectivity

Authentage Catalogus 2024 Authentage Katalogus 2024 Authentage Catalogue 2024 Authentage Katalog 2024 Authentage Verlichting Authentage Lighting Authentage éclairage Authentage Beleuchtung
Authentage Webshop Authentage Verlichting Authentage Armaturen Authentage Winkels Authentage Verkooppunten Authentage Verdelers Authentage Verdeelpunten Authentage België Authentage Nederland Authentage Vente en Ligne Authentage Boutique Vente en Ligne Authentage Luminaires Authentage éclairage
Authentage Revendeurs Authentage Points de vente Authentage Magasins Authentage Boutiques Authentage Points de distribution Authentage France Authentage Lighting Authentage Retailers Authentage Dealers Authentage Distributors Authentage Points of sale Authentage Resellers Authentage England
Authentage Beleuchtung Authent Beleuchtung Authentage Leuchten Authentage Händler Authentage Shops Authentage Verkaufsstellen Authentage Vertriebspartner Authentage Deutschland Authentage E-shop Authentage Geschäfte Authentage Vertriebsstellen

www.Bcosy.be - Waarschoot - België - Belgique - Belgium - Belgien tel 0032 (0) 9 378 24 30 Mail: info@bcosy.be

Authentage Webshop Authentage Verlichting Authentage Armaturen Authentage Winkels Authentage Verkooppunten Authentage Verdelers Authentage Verdeelpunten Authentage België
Authentage Nederland Authentage Vente en Ligne Authentage Boutique Vente en Ligne Authentage Luminaires Authentage éclairage
Authentage Revendeurs Authentage Points de vente Authentage Magasins Authentage Boutiques Authentage Points de distribution Authentage France Authentage Lighting
Authentage Retailers Authentage Dealers Authentage Distributors Authentage Points of sale Authentage Resellers Authentage England
Authentage Beleuchtung Authent Beleuchtung Authentage Leuchten Authentage Händler Authentage Shops Authentage Verkaufsstellen Authentage Vertriebspartner
Authentage Deutschland Authentage E-shop Authentage Geschäfte Authentage Vertriebsstellen
Authentage Catalogus 2024 Authentage Katalogus 2024 Authentage Catalogue 2024 Authentage Katalog 2024 Authentage Verlichting Authentage Lighting Authentage éclairage
Authentage Beleuchtung